Definite purpose contactors

Definite purpose
Contactors

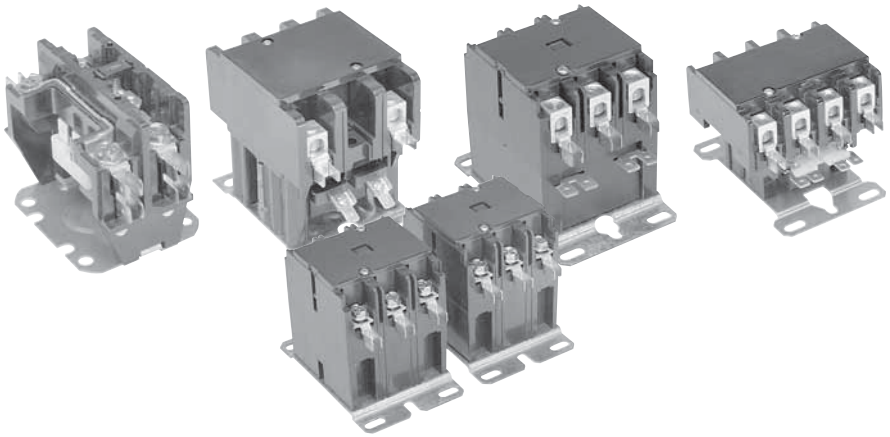

Applications

Type DP contactors provide high performance with flexibility and reliability, designed to match numerous applications including:

- Motors
- Power supplies
- Food service equipment
- Compressors
- Business machines
- Resistive heating
- Air conditioning
- Refrigeration equipment
- Welding

Agency approvals

- UL 508 Guide No. NLDX2, File # E224401
- CE/Semko Certified
- EN60947-4-1:1991
- IEC 947-4-1

Features

- Available as:
  – 30A, 1, 2, 3 or 4 pole
  – 40A, 2, 3 or 4 pole
  – 60A, 3 pole
- Industry standard mounting plate provides easily accessible mounting holes
- Coil terminals are provided with #6-32 screws and (1) .250 quick connect or dual .250 quick connect terminals
- Exclusive hex, slotted, phillips #10-32 terminal screws for main terminals
- Coil is Class B (130° C) Insulation system with wide range of voltages and 50/60 Hz ratings
- Double E Magnet Assembly provides optimal performance with reduced power consumption
- Snap-in auxiliary switch with 1 SPDT or 2 SPDT contacts available as an option
- 1 NO & 1 NC auxiliary contact block with 600 VAC rating available as an option
- Base assembly is made from high arc-resistant plastic

Catalog number explanation

DP 30 C 3P - 1 /B

Definite purpose (DP)

Frame size (30)
30 = 30A
40 = 40A
60 = 60A

Contactor type (C)
C = Non-reversing

Power poles (3P)
1P = 1 NO
2P = 2 NO
3P = 3 NO
4P = 4 NO

Coil voltage (1)
(See coil voltage selection chart)

Bulk pack quantities (/B)

30A, 40A & 60A

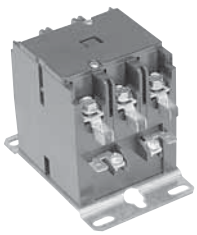

DP30C3P-F

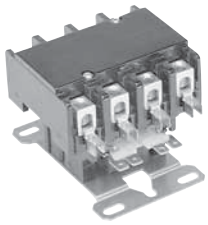

DP40C4P-F

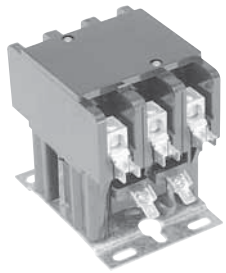

DP60C3P-F

30A, 40A & 60A

Full load amps	Number of poles	Locked rotor amps			Resistive amps	Maximum HP 1 phase		Maximum HP 3 phase				Bulk pack ①	Catalog number qty.	Individual pack list price	Bulk pack list price
		240/ 277V	480V	600V		120V	240V	200/ 208V	240/ 277V	480V	600V				
30	1	150	75	50	40	1	2	—	—	—	—	50	DP30C1P-F	**$ 30**	**$ 27**
30	2	150	125	100	40	2	3	—	—	—	—	50	DP30C2P-F	**38**	**34**
30	3	180	150	120	40	2	5	10	10	15	20	25	DP30C3P-F	**55**	**50**
30	4	180	150	120	40	2	5	10	10	10	—	20	DP30C4P-F	**75**	**68**
40	2	240	200	160	50	2	3	—	—	—	—	50	DP40C2P-F	**46**	**42**
40	3	240	200	160	50	3	7.5	10	10	20	25	25	DP40C3P-F	**60**	**54**
40	4	240	200	160	50	3	7.5	10	10	10	—	20	DP40C4P-F	**100**	**90**
60	3	360	300	240	75	2	10	25	25	30	30	10	DP60C3P-F	**147**	**140**

Coil voltage selection chart

Voltage	24VAC	120VAC	208/240VAC	277VAC	480VAC	575VAC
Suffix #	F	1	2	C	4	5

Coil voltage selection

All catalog numbers include a 24VAC coil. To select other coil voltages, substitute the code from the Coil Voltage Selection Chart for the first digit after the dash in the catalog number.

Auxiliary contact blocks (3 pole only)

Description	Catalog number 30A - 40A	Catalog number 60A	List price
NO or NC SPDT 1 NO & 1 NC	CADP40-10 CADP40-11	CADP60-10 —	**$ 10**

Contact rating of 1 NO & 1 NC

		120V	240V	480V	600V
Break	A	3.0	1.5	.75	.6
Make	A	30	15	7.5	6
Continous	A	10	10	10	10

Quick connect terminals on all auxiliary switches are .250 wide.

Contact rating of SPDT

Voltage	Current rating
125VAC	10A, 1/3 HP
120VAC	4A on lamp load
250VAC	10A, 1/3 HP
125VDC	.5A
250VDC	.25A

Ordering bulk quantities

To order bulk package quantities add "/B" to the end of the catalog number.

Example: For quantities of 25 of a 30A 3 pole contactor with 24VAC coil, the catalog number would be: DP30C3P-F/B

Mechanical interlock

Frame size		Catalog number	List price
DP30 DP40		VMDP-1	**$ 7**

① Must be ordered in standard pack quantities as shown. Add suffix "/B" to the catalog number.

Technical data
30A – 60A
1, 2, 3, & 4 Pole

30A – 40A — 1 & 2 pole

Coil technical data		DP30C1P				DP30, DP40C2P			
Nominal coil voltage		24	120	208/240	277	24	120	208/240	277
Maximum pickup volts		18	88	177	221	18	88	177	221
Drop-out volts range		6 – 15	20 – 70	40 – 170	50 – 165	6 – 15	20 – 70	40 – 140	50 – 165
Nominal inrush VA	50 Hz	31	31	35	31	22	22	22	22
Nominal inrush VA	60 Hz	28	28	32	28	20	20	20	20
Nominal sealed VA	50 Hz	6	6	7	6	5.5	5.5	5.5	5.5
Nominal sealed VA	60 Hz	5	5	6	5	4.5	4.5	4.5	4.5
Nominal DC resistance	Ohms	17.5	450	1800	2252	13	275	1056	1772

Other specifications	DP30C1P	DP30, DP40C2P
Line and load terminals	# 10 – 32 screw ①	Box lug ①
Wire size AWG min – max	16 – 8②	14 – 4 Cu/Al
Tightening torque (recommended)	25 in. lbs.	40 in. lbs
Coil termination	Dual .250 QC (2)	Dual .250 QC (2)
Quick connects .250 std. 1 – 1.5 pole	Quad	Quad
Quick connects .250 std. 2 pole	Dual or quad	Dual or quad
Covers	Optional	Standard
Insulation system	130° C Class B	130° C Class B

30A - 60A — 3 pole

Coil technical data		DP30, DP40C3P					DP60C3P				
Nominal coil voltage		24	120	208/240	277	480	24	120	208/240	277	480
Maximum pickup volts		18	88	177	220	384	18	93	177	235	374
Drop-out volts range		6 –15	20 – 70	40 – 140	65 – 185	150 – 270	6 – 15	20 – 70	40 – 135	50 – 180	150 – 286
Nominal inrush VA	50 Hz	65	65	65	65	65	140	140	140	140	140
Nominal inrush VA	60 Hz	60	60	60	60	60	132	132	132	132	132
Nominal sealed VA	50 Hz	7.5	7.5	7.5	7.5	7.5	20	20	20	20	20
Nominal sealed VA	60 Hz	6	6	6	6	6	14	14	14	14	14
Nominal DC resistance	Ohms	6.6	165	660	880	1320	2.4	45	180	280	852

Other specifications	DP30C3P	DP40C3P	DP60C3P
Line and load terminals	# 10 – 32 Screw ①	Box lug ①	Box lug ①
Wire size AWG min – max	16 – 8 ②	14 – 7 Cu/Al	14 – 2 Cu/Al
Tightening torque (recommended)	25 in. lbs	40 in.lbs	50 in. lbs
Quick connects: power terminals	Dual.250 QC	Dual.250 QC	Dual.250 QC
Coil terminals	Dual .250 QC (2)	Dual .250 QC (2)	#6 – 35 screw & .250 QC (2)
Covers	Optional	Standard	Standard
Insulation system	130° C Class B	130° C Class B	130° C Class B

30A – 40A — 4 Pole

Coil technical data		DP30, DP40C4P				
Nominal coil voltage		24	120	208/240	277	480
Maximum pickup volts		19.2	88	177	220	384
Drop-out volts range		6 – 15	20 – 70	40 – 140	65 – 185	150 – 270
Nominal inrush VA	50 Hz	68	68	58	58	48
Nominal inrush VA	60 Hz	60	60	55	52	52
Nominal sealed VA	50 Hz	14	14	11	11	11
Nominal sealed VA	60 Hz	9	9	9.5	9.5	9
Nominal DC resistance	Ohms	5	148	550	750	2100

Other specifications	DP30C4P	DP40C4P
Line and load terminals	# 10 – 32 screw ①	Box Lug
Wire size AWG Min – Max	16 – 8 ②	14 – 4 Cu/AL
Tightening torque (recommended)	22 in. lbs	40 in. lbs
Quick connects: power terminals	Dual .250 QC	Dual .250 QC
Coil terminals	Dual .250 QC (2)	Dual .250 QC (2)
Covers	Optional	Standard
Insulation system	130° C Class B	130° C Class B

① See page 1.82 to 1.85 for description and approximate dimensions.
② Stranding must be split for #8 wire.

Approximate dimensions
30A
1, 2 & 3 Pole

00.00 / 00.00 Inches [Millimeters]

DP30C1P

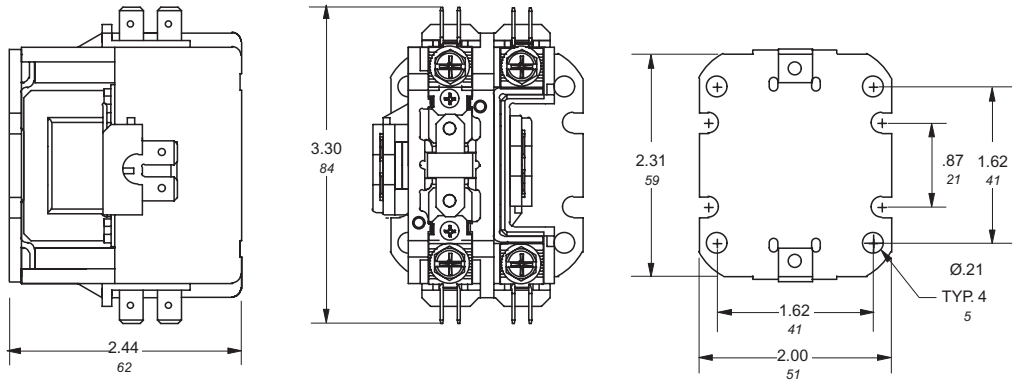

DP30C2P

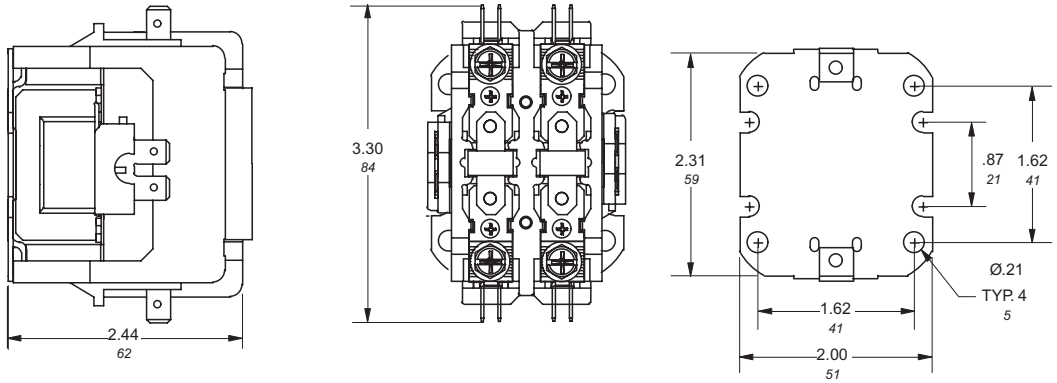

DP30C3P

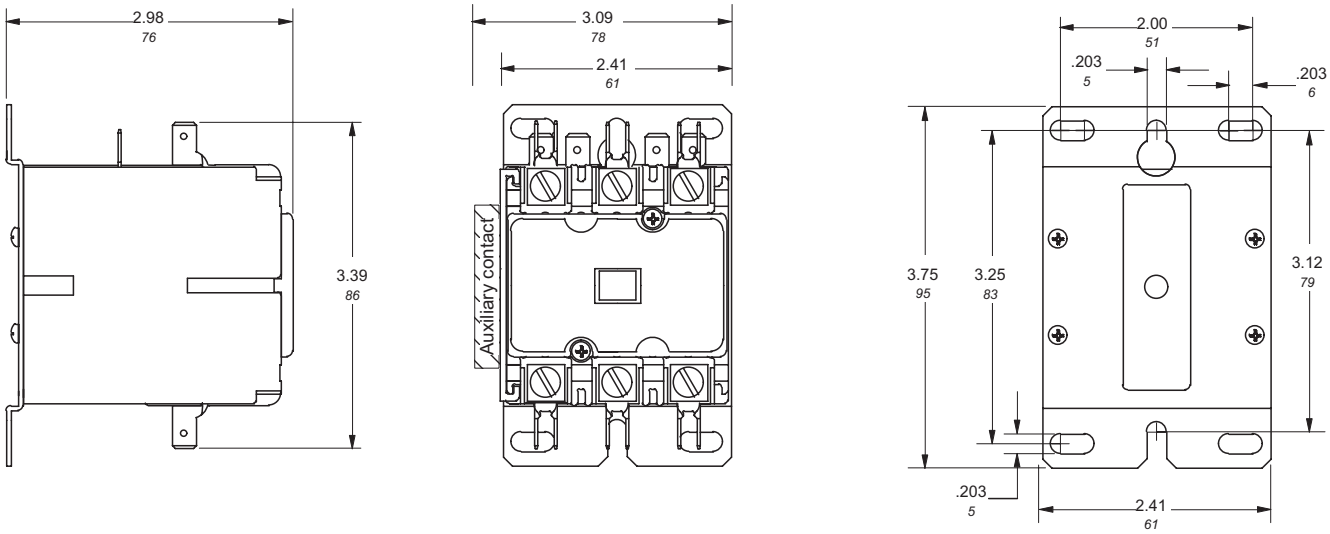

Approximate dimensions
30A 4 Pole
40A 2 & 3 Pole

00.00 / 00.00 Inches [Millimeters]

DP30C4P

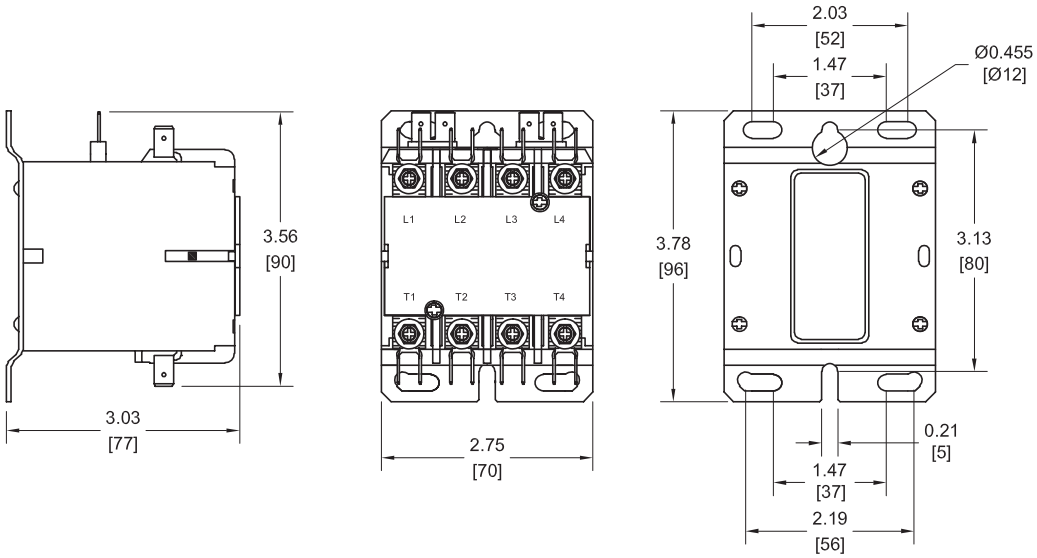

DP40C2P

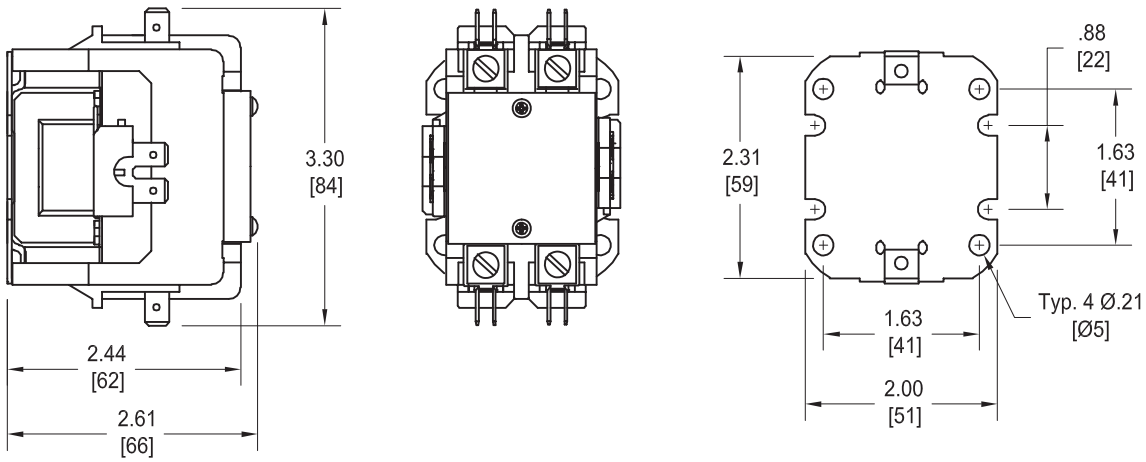

DP40C3P

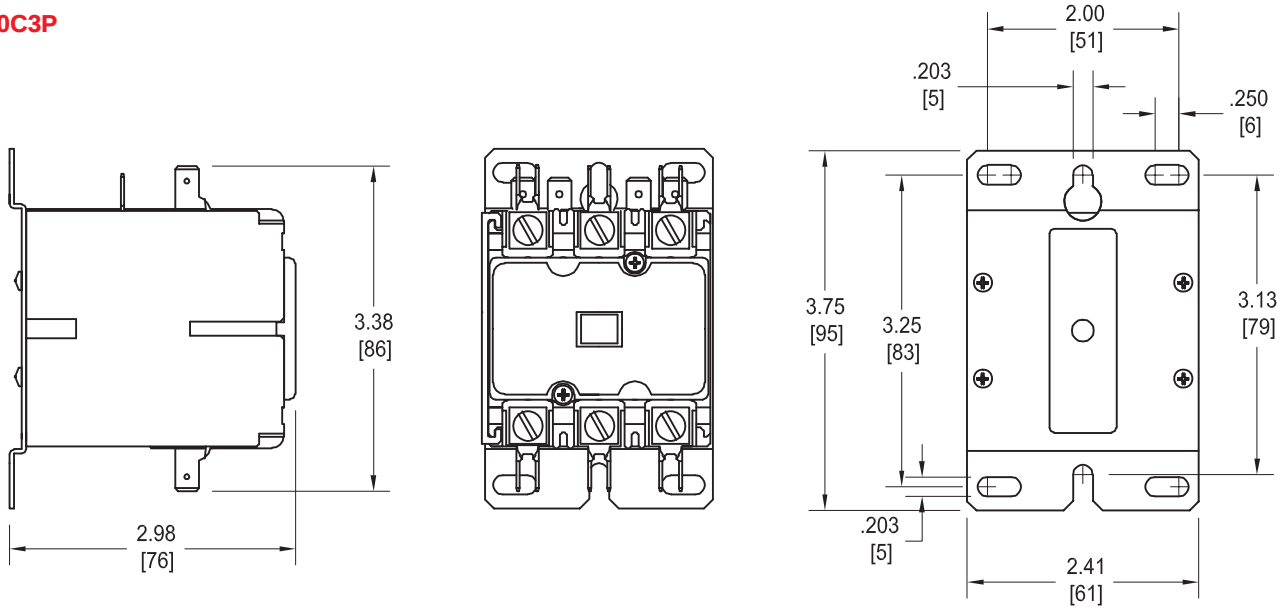

Approximate dimensions
40A 4 Pole
60A 3 Pole

DP40C4P

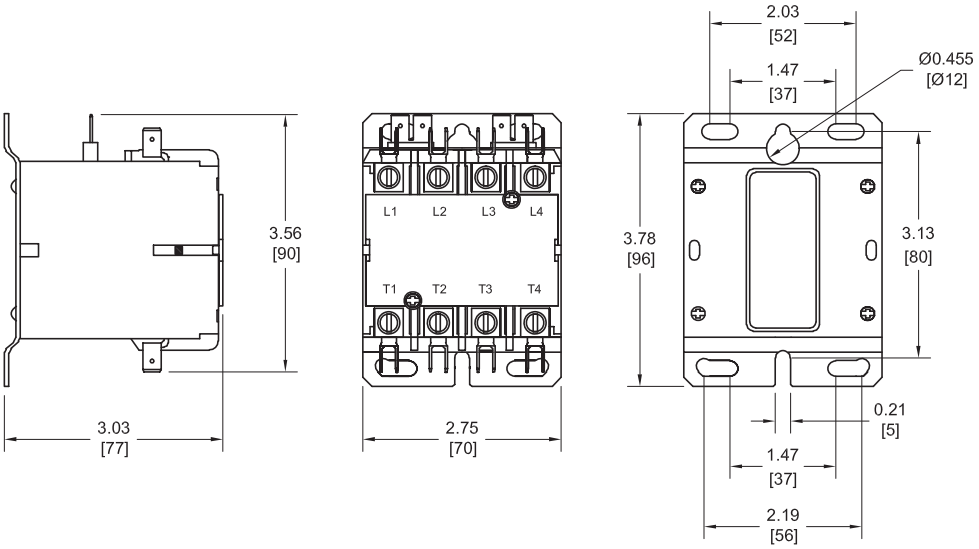

DP60C3P

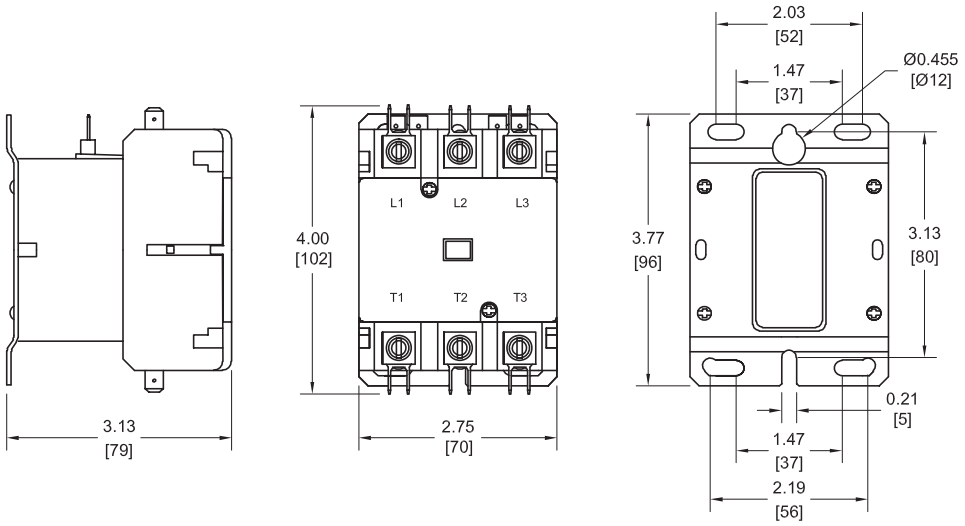

Approximate dimensions
Terminations

Screw

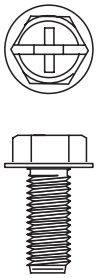

Standard on DP30

10-32 Combination Phillips, slotted & 5/16 Hex Head

Lugs

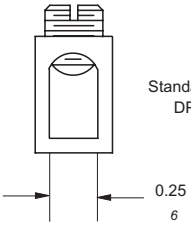

Standard on DP40

14 - 4 AWG, Cu / Al

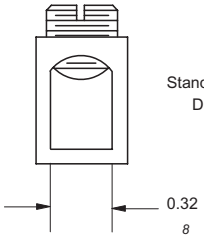

Standard on DP60

14 - 2 AWG, Cu / Al

Notes