Softstarters
Type PST

Description

- Wide main voltage range, 200 - 690 VAC
- Wide control voltage range, 100 - 250 V, 50/60 Hz
- Current ratings 30 to 1050 A (In Line) and 52 - 1800 A (Inside Delta)
- Same unit can be used for both In Line and Inside Delta connection
- Premium adjustable Softstarter functions like start/stop ramp, kick start, jog, step down voltage and sequential starts
- Current limit adjustable between 200% to 500% of motor FLA
- Thermistor (PTC) supervision of motor winding
- Real time clock
- Logging of last 20 events with time stamp
- Prepared for Field-bus communication
- Programmable electronic overloads: Classes 10A, 10, 20 & 30
- Locked rotor protection
- Motor underload protection
- Phase imbalance protection
- Phase reversal protection

Softstarters
Type PST

General information
Catalog number explanation
Open & enclosed

Open

PST B 370 600 - 70

Softstarter
Type PST

Bypass
No digit – No integrated bypass
B – Integrated bypass

Current rating

UL / IEC	UL / IEC
30 – 28/30	210 – 192/210
37 – 34/37	250 – 248/250
44 – 42/44	300 – 302/300
50 – 54/50	370 – 361/370
72 – 68/72	470 – 480/470
85 – 80/85	570 – 590/570
105 – 104/105	720 – 720/720
142 – 130/142	840 – 840/840
175 – 156/175	1050 – 1062/1050

Line voltage
600 – 208/230/480/600 V
690 – 690 V ③

Control voltage
70 – 100 - 250 V, 50/60 Hz

Enclosed

T 100 D F 1 – 48 D A

Soft starter settings
T – Type PST Enclosed

Horsepower

010 – 10	125 – 125	800 – 800
015 – 15	150 – 150	900 – 900
020 – 20	200 – 200	1000 – 1000
025 – 25	250 – 250	1200 – 1200
030 – 30	300 – 300	1400 – 1400
040 – 40	350 – 350	1500 – 1500
050 – 50	400 – 400	1600 – 1600
060 – 60	450 – 450	1700 – 1700
075 – 75	500 – 500	1800 – 1800
100 – 100	600 – 600	

Connection type
L – Inline
D – Inside Delta

Combination type
No digit – non-combination
F – fusible disconnect
B – thermal magnetic circuit breaker
M – magnetic only breaker
N – non-fusible disconnect

Enclosure
1 – NEMA 1
2 – NEMA 12 ②
3 – NEMA 3R ②
4 – NEMA 4 ②
X – NEMA 4x stainless steel ②

Options ①
A – Start-stop pushbutton
B – Across the line rated (AC3) contactor with emergency bypass control
C – 2 position selector switch
D – 3 position selector switch
E – Pilot light
F – Start-stop pushbutton and pilot light
H – 2 position selector switch and pilot light
J – 3 position selector switch and pilot light
M – Shunt rated (AC1) bypass contactor
W – Isolation contactor

Fuse clip

A – 30A, 600V, Class J	H – 1200A, 600V, Class L
B – 60A, 600V, Class J	J – 1600A, 600V, Class L
C – 100A, 600V, Class J	K – 2000A, 600V, Class L
D – 200A, 600V, Class J	L – 2500A, 600V, Class L
E – 400A, 600V, Class J	M – 3000A, 600V, Class L
F – 600A, 600V, Class J	N – 4000A, 600V, Class L
G – 800A, 600V, Class L	

Circuit Breaker Amp Ratings

D – 15	M – 70	W – 225	E – 700	N – 3000
E – 20	N – 80	X – 250	F – 800	
F – 25	P – 90	Y – 300	G – 900	
G – 30	R – 100	Z – 350	H – 1000	
H – 35	S – 125	A – 400	J – 1200	
J – 40	T – 150	B – 450	K – 1600	
K – 50	U – 175	C – 500	L – 2000	
L – 60	V – 200	D – 600	M – 2500	

MCP/MAG Only Rating

A – 3	E – 50	J – 400
B – 5	F – 100	K – 600
C – 10	G – 150	L – 800
D – 25	H – 225	M – 1200

Line voltage
20: 208V 120V control voltage
23: 230V 120V control voltage
38: 380V 220V control voltage
41: 415V 220V control voltage
48: 480V 120V control voltage
60: 600V 120V control voltage

① For more options, see page 6.27
② Bypass contactor required when integrated bypass is not included.
③ Add 30% to the list price.

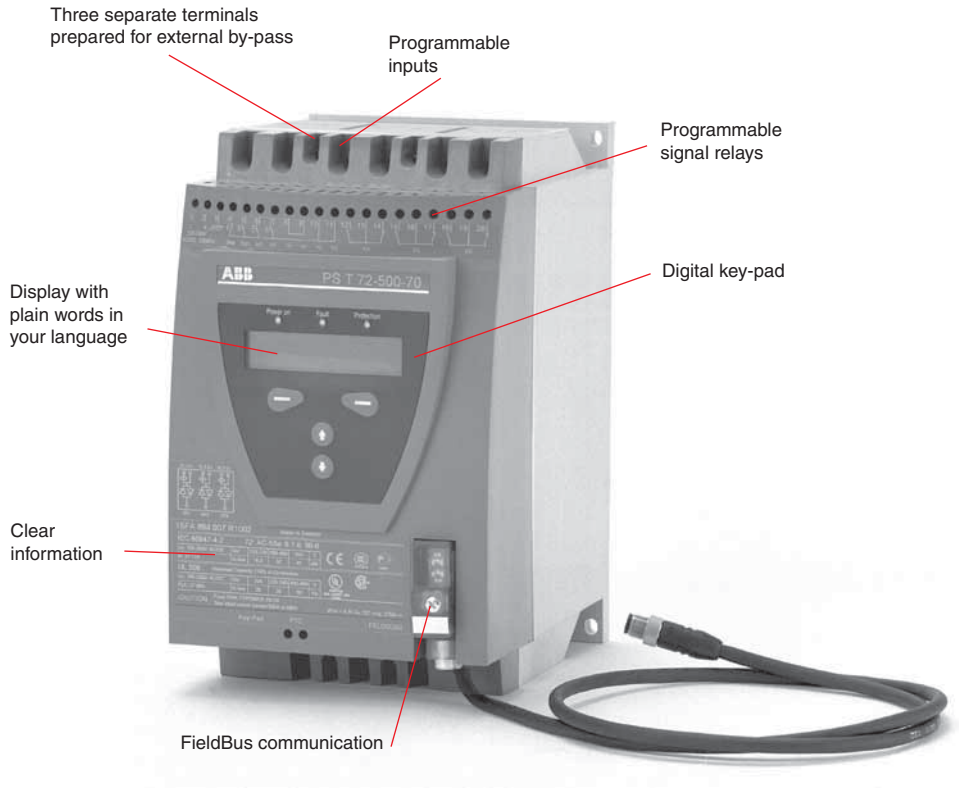

Application

The PST range is a microprocessor based softstarter designed with the latest technology for soft start and soft stop of motors. The PST Softstarter has several advanced motor protection features as standard. The four button key pad and the logic structure of the menu makes the installation, commissioning and operation easy. It is possible to choose between 12 different languages.

The PST Softstarter can be used with or without a by-pass contactor. The larger sizes, PSTB370 – PSTB1050, include a built-in by-pass contactor.

The PST Softstarter can be selected according to the rated motor power in normal duty applications like pumps, compressors, elevators, escalators, short conveyor belts and bow thrusters.

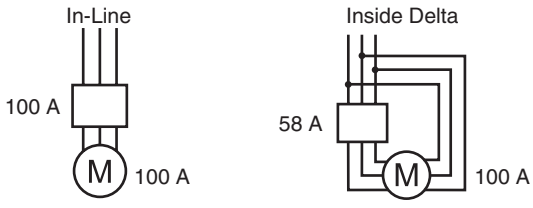

In-Line and Inside Delta connection of PST30 - 1050

Digital display

Your business is going global. Shouldn't your motor control go global, too? The PST display gives you information presented in plain words — in your language. You can choose between almost a dozen languages including English, German, Italian, Chinese, Finnish, Swedish, French, Spanish, Dutch, Russian, Turkish and Portuguese. On the PST display, you get all the information you need to set up, adjust and trouble-shoot. This makes the PST extremely easy to handle and reduces the risk of misinterpretations.

At any time, you can read output current, output voltage, number of starts, total run time and motor temperature on the display. If a fault should occur, this is also indicated on the display. The fault messages are presented in clear text in the selected language.

General information
Application and description

Four button keypad
The PST employs the same basic user concept as today's advanced mobile telephones. Using the four buttons on the keypad, you can easily adjust your own start and stop profile and motor protection functions for any type of application. There are standard settings for many common applications including pumps, conveyors, fans, mixers and compressors for quick and easy set up.

You can also set the advanced warning parameters to allow potential problems to be identified before real problems occur. A password protection function is available to prevent unauthorized changes to the programming.

Remote four button keypad
This optional remote keypad is an extended HMI (human-machine interface) for all PST(B) softstarters. The remote keypad allows you to access all functions from the PST(B) on the outside of the enclosure door.

The interface/display is exactly the same as the one on the softstarter (working in parallel with the one on the product). Used as a handheld device, it is easy to set up parallel softstarter units as you can copy data from one softstarter unit and download to another.

The keypad kit includes all necessary details for assembling: 3 screws, 10 ft. communication cable, installation instructions and a drilling plan.

The keypad has the following approvals: UL Type 1, 12, Indoor 4/4X.

Starting several motors
You can store as many as three different starting parameter sets for optimal sequence start of three different motors. You can use this function for two or three speed motors as well.

Integrated advanced motor protection
Inside the PST Softstarter, you will find useful features for advanced motor and softstarter protection, including: programmable overload protection, high current, underload, phase imbalance, phase reversal, thyristor overload protection, and bypass monitoring to ensure proper by-pass operation.

Programmable signal relays
All PST units have three programmable signal relays where each relay can signal Run, Top of Ramp or Event. The Event setting can be used to signal fault protections or warnings. The supervisory functions monitor not only software and critical softstarter functionality but also phase loss and out of frequency range.

Integrated by-pass contactor
On the larger sizes (PSTB370 – PSTB1050), there is an integrated ABB AF contactor. This gives you advantages in terms of cost-saving, (less investment in fans, cables, time), space saving (more compact soft starter; no fan that takes up space), and last but not least, energy saving. With a by-pass contactor you can reduce the power losses during normal run by 90% or more.

For the smaller PST below 370A, which are not equipped with built-in contactors, the units have double connections for the main terminals on the line side. The extra terminals are used to connect an external by-pass contactor in order to enable the integrated protection functions.

PSTB1050 with integrated by-pass contactor.

Fieldbus communication
The PST Softstarter has a built-in interface on the front for connection of the ABB FieldBusPlug used for fieldbus communication. Through this interface, it is possible to control the softstarter, achieve status information, upload and download parameters. The interface between the softstarter and the FieldBusPlug is always the same. Independently of PST Softstarter size or delivery date, it is possible to connect to any fieldbus protocol later on since this is defined in the FieldBusPlug itself. The following protocols are currently available: AS-I, DeviceNet and Profibus DP. To connect the PST Softstarter to a fieldbus system, you need the accessories described on pages 6.33 to 6.34 as well as specific software for PLC set-up, which is available on the ABB web site; see the Resources section at the bottom of the Softstarter product page at www.abb-control.com/products/softstarters.htm.

Open
In-Line, Inside Delta
7.5 – 1800 HP

PST72-600-70

PST142-600-70

PST175-600-70

PSTB370-600-70

PSTB570-600-70

Connected In-Line ①

Maximum motor current		Maximum horsepower					Weight	Catalog	List
UL	IEC	208V	240V	380V	480V	600V	(lbs.)	number	price
28	30	7.5	10	15	20	25	9	PST30-600-70	**$ 1330**
34	37	10	10	20	25	30	9	PST37-600-70	**1360**
42	44	10	15	25	30	40	11	PST44-600-70	**1390**
54	50	15	20	30	40	50	11	PST50-600-70	**1730**
68	72	20	25	40	50	60	22	PST72-600-70	**1755**
80	85	25	30	50	60	75	22	PST85-600-70	**2380**
104	105	30	40	60	75	100	27	PST105-600-70	**2410**
130	142	40	50	75	100	125	33	PST142-600-70	**3375**
156	175	50	60	100	125	150	44	PST175-600-70	**3420**
192	210	60	75	125	150	200	49	PST210-600-70	**3870**
248	250	75	100	150	200	250	49	PST250-600-70	**4350**
302	300	100	100	150	250	300	53	PST300-600-70	**4480**
361	370	125	150	200	300	350	84	PSTB370-600-70	**5660**
480	470	150	200	300	400	500	93	PSTB470-600-70	**7000**
590	570	200	250	350	500	600	97	PSTB570-600-70	**8550**
720	720	250	300	450	600	700	119	PSTB720-600-70	**9630**
840	840	300	350	500	700	800	124	PSTB840-600-70	**10,900**
1062	1050	400	450	600	900	1000	137	PSTB1050-600-70	**18,000**

Connected Inside Delta ①

Maximum motor current		Maximum horsepower					Weight	Catalog	List
UL	IEC	208V	240V	380V	480V	600V	(lbs.)	number	price
42	51	10	15	30	30	40	9	PST30-600-70	**$ 1330**
54	64	15	20	40	40	50	9	PST37-600-70	**1360**
72	76	20	25	50	50	60	11	PST44-600-70	**1390**
80	86	25	30	50	60	75	11	PST50-600-70	**1730**
104	124	30	40	75	75	100	22	PST72-600-70	**1755**
130	148	40	50	75	100	125	22	PST85-600-70	**2380**
156	181	50	60	100	125	150	27	PST105-600-70	**2410**
192	245	60	75	150	150	200	33	PST142-600-70	**3375**
248	303	75	100	200	200	250	44	PST175-600-70	**3420**
302	363	100	100	200	250	300	49	PST210-600-70	**3870**
361	433	125	150	250	300	350	49	PST250-600-70	**4350**
480	519	150	200	300	400	500	53	PST300-600-70	**4480**
590	640	200	250	400	500	600	84	PSTB370-600-70	**5660**
720	814	250	300	500	600	700	93	PSTB470-600-70	**7000**
840	987	300	350	600	700	800	97	PSTB570-600-70	**8550**
1247	1247	400	500	800	1000	1200	119	PSTB720-600-70	**9630**
1454	1454	500	600	900	1200	1500	124	PSTB840-600-70	**10,900**
1839	1818	600	700	1000	1500	1800	137	PSTB1050-600-70	**18,000**

① Different frame sizes are separated by rules.

Enclosed
NEMA 1, 12
In-Line, 5 – 1000 HP

Connected In-Line

Max. motor current		Maximum horsepower					NEMA1, 480V	NEMA1, 600V		NEMA12, 480V	NEMA12, 600V	
UL	IEC	208V	240V	380V	480V	600V	Catalog Number	Catalog Number	List Price	Catalog Number	Catalog Number	List Price
18	18	5 —	5 —	10 —	10 —	— 15	T010L1-48 —	— T015L1-60	**$ 1655**	T010L2-48M —	— T015L2-60M	**$ 1905**
28	30	7.5 —	10 —	15 —	20 —	— 25	T020L1-48 —	— T025L1-60	**1655**	T020L2-48M —	— T025L2-60M	**1930**
34	37	10 —	10 —	20 —	25 —	— 30	T025L1-48 —	— T030L1-60	**1685**	T025L2-48M —	— T030L2-60M	**2085**
42	44	10 —	15 —	25 —	30 —	— 40	T030L1-48 —	— T040L1-60	**1715**	T030L2-48M —	— T040L2-60M	**2165**
54	50	15 —	20 —	30 —	40 —	— 50	T040L1-48 —	— T050L1-60	**2055**	T040L2-48M —	— T050L2-60M	**2555**
68	72	20 —	25 —	40 —	50 —	— 60	T050L1-48 —	— T060L1-60	**2080**	T050L2-48M —	— T060L2-60M	**2630**
80	85	25 —	30 —	50 —	60 —	— 75	T060L1-48 —	— T075L1-60	**2705**	T060L2-48M —	— T075L2-60M	**3355**
104	105	30 —	40 —	60 —	75 —	— 100	T075L1-48 —	— T100L1-60	**2735**	T075L2-48M —	— T100L2-60M	**3460**
130	142	40 —	50 —	75 —	100 —	— 125	T100L1-48 —	— T125L1-60	**3875**	T100L2-48M —	— T125L2-60M	**4775**
156	175	50 —	60 —	100 —	125 —	— 150	T125L1-48 —	— T150L1-60	**3920**	T125L2-48M —	— T150L2-60M	**5170**
192	210	60 —	75 —	125 —	150 —	— 200	T150L1-48 —	— T200L1-60	**4370**	T150L2-48M —	— T200L2-60M	**5770**
248	250	75 —	100 —	150 —	200 —	— 250	T200L1-48 —	— T250L1-60	**4850**	T200L2-48M —	— T250L2-60M	**6550**
302	300	100 —	100 —	150 —	250 —	— 300	T250L1-48 —	— T300L1-60	**5080**	T250L2-48M —	— T300L2-60M	**7830**
361	370	125 —	150 —	200 —	300 —	— 350	T300L1-48M① —	— T350L1-60M①	**6260**	T300L2-48M① —	— T350L2-60M①	**6910**
414	400	— —	— —	250 —	350 —	— 400	T350L1-48M① —	— T400L1-60M①	**7700**	T350L2-48M① —	— T400L2-60M①	**8450**
480	470	150 —	200 —	300 —	400 —	— 500	T400L1-48M① —	— T500L1-60M①	**7700**	T400L2-48M① —	— T500L2-60M①	**8550**
590	570	200 —	250 —	350 —	500 —	— 600	T500L1-48M① —	— T600L1-60M①	**9350**	T500L2-48M① —	— T600L2-60M①	**10,350**
720	720	250 —	300 —	450 —	600 —	— 700	T600L1-48M① —	— T700L1-60M①	**10,830**	T600L2-48M① —	— T700L2-60M①	**11,830**
840	840	300 —	350 —	500 —	700 —	— 800	T700L1-48M① —	— T800L1-60M①	**12,900**	T700L2-48M① —	— T800L2-60M①	**14,000**
960	—	350 —	400 —	— —	800 —	— 900	T800L1-48M① —	— T900L1-60M①	**21,000**	T800L2-48M① —	— T900L2-60M①	**22,300**
1062	1050	400 —	450 —	600 —	900 —	— 1000	T900L1-48M① —	— T1000L1-60M①	**21,000**	T900L2-48M① —	— T1000L2-60M①	**22,300**

① Includes integrated shunt rated (AC1) bypass contactor as standard. For across the line rated (AC3) bypass contactors, see page 6.30.

Enclosed
NEMA 1, 12
Inside Delta, 7.5 – 1800 HP

Connected Inside Delta

Max. motor current		Maximum horsepower					NEMA1, 480V	NEMA1, 600V		NEMA12, 480V	NEMA12, 600V	
UL	IEC	208V	240V	380V	480V	600V	Catalog Number	Catalog Number	List Price	Catalog Number	Catalog Number	List Price
28	30	7.5 —	10 —	15 —	20 —	— 25	T020D1-48 —	— T025D1-60	**$ 1655**	T020D2-48M —	— T025D2-60M	**$ 1905**
34	37	10 —	10 —	20 —	25 —	— 30	T025D1-48 —	— T030D1-60	**1655**	T025D2-48M —	— T030D2-60M	**1905**
42	44	10 —	15 —	25 —	30 —	— 40	T030D1-48 —	— T040D1-60	**1655**	T030D2-48M —	— T040D2-60M	**1930**
54	50	15 —	20 —	30 —	40 —	— 50	T040D1-48 —	— T050D1-60	**1685**	T040D2-48M —	— T050D2-60M	**2085**
68	72	20 —	25 —	40 —	50 —	— 60	T050D1-48 —	— T060D1-60	**1715**	T050D2-48M —	— T060D2-60M	**2165**
80	85	25 —	30 —	50 —	60 —	— 75	T060D1-48 —	— T075D1-60	**2055**	T060D2-48M —	— T075D2-60M	**2555**
104	105	30 —	40 —	60 —	75 —	— 100	T075D1-48 —	— T100D1-60	**2080**	T075D2-48M —	— T100D2-60M	**2630**
130	142	40 —	50 —	75 —	100 —	— 125	T100D1-48 —	— T125D1-60	**2705**	T100D2-48M —	— T125D2-60M	**3355**
156	175	50 —	60 —	100 —	125 —	— 150	T125D1-48 —	— T150D1-60	**2735**	T125D2-48M —	— T150D2-60M	**3460**
192	210	60 —	75 —	125 —	150 —	— 200	T150D1-48 —	— T200D1-60	**3875**	T150D2-48M —	— T200D2-60M	**4775**
248	250	75 —	100 —	150 —	200 —	— 250	T200D1-48 —	— T250D1-60	**3920**	T200D2-48M —	— T250D2-60M	**5120**
302	300	100 —	100 —	150 —	250 —	— 300	T250D1-48 —	— T300D1-60	**4370**	T250D2-48M —	— T300D2-60M	**5770**
361	370	125 —	150 —	200 —	300 —	— 350	T300D1-48 —	— T350D1-60	**4850**	T300D2-48M —	— T350D2-60M	**6550**
414	400	— —	— —	250 —	350 —	— 400	T350D1-48 —	— T400D1-60	**5080**	T350D2-48M —	— T400D2-60M	**7830**
480	470	150 —	200 —	300 —	400 —	— 500	T400D1-48 —	— T500D1-60	**5080**	T400D2-48M —	— T500D2-60M	**7830**
590	570	200 —	250 —	350 —	500 —	— 600	T500D1-48M① —	— T600D1-60M①	**6260**	T500D2-48M① —	— T600D2-60M①	**6910**
720	720	250 —	300 —	450 —	600 —	— 700	T600D1-48M① —	— T700D1-60M①	**7700**	T600D2-48M① —	— T700D2-60M①	**8550**
840	840	300 —	350 —	500 —	700 —	— 800	T700D1-48M① —	— T800D1-60M①	**9350**	T700D2-48M① —	— T800D2-60M①	**10,350**
960	—	350 —	400 —	— —	800 —	— 900	T800D1-48M① —	— T900D1-60M①	**10,830**	T800D2-48M① —	— T900D2-60M①	**12,130**
1062	1050	400 —	450 —	600 —	900 —	— 1000	T900D1-48M① —	— T1000D1-60M①	**10,830**	T900D2-48M① —	— T1000D2-60M①	**12,130**
1247	1215	400 —	500 —	800 —	1000 —	— 1200	T1000D1-48M① —	— T1200D1-60M①	**10,830**	T1000D2-48M① —	— T1200D2-60M①	**12,130**
1454	1370	500 —	600 —	900 —	1200 —	— 1500	T1200D1-48M① —	— T1500D1-60M①	**12,900**	T1200D2-48M① —	— T1500D2-60M①	**14,650**
1839	1823	600 —	700 —	1200 —	1500 —	— 1800	T1500D1-48M① —	— T1800D1-60M①	**21,000**	T1500D2-48M① —	— T1800D2-60M①	**22,750**

① Includes integrated shunt rated (AC1) bypass contactor as standard. For across the line rated (AC3) bypass contactors, see page 6.30.

Enclosed
NEMA 1, Combination
In-Line, 5 – 1000 HP

Connected In-Line

Max. motor current		Maximum horsepower					NEMA1, 480V Circuit breaker	NEMA1, 600V Circuit breaker		NEMA1, 480V Fused disconnect	NEMA 1, 600V Fused disconnect	
UL	IEC	208V	240V	380V	480V	600V	Catalog Number	Catalog Number	List Price	Catalog Number	Catalog Number	List Price
18	18	5 —	5 —	10 —	10 —	— 15	T010LB1-48E —	— T015LB1-60E	**$ 2055**	T010LF1-48A —	— T015LF1-60A	**$ 2055**
28	30	7.5 —	10 —	15 —	20 —	— 25	T020LB1-48J —	— T025LB1-60J	**2065**	T020LF1-48B —	— T025LF1-60B	**2065**
34	37	10 —	10 —	20 —	25 —	— 30	T025LB1-48K —	— T030LB1-60K	**2110**	T025LF1-48B —	— T030LF1-60B	**2110**
42	44	10 —	15 —	25 —	30 —	— 40	T030LB1-48L —	— T040LB1-60L	**2315**	T030LF1-48C —	— T040LF1-60C	**2315**
54	50	15 —	20 —	30 —	40 —	— 50	T040LB1-48N —	— T050LB1-60N	**2655**	T040LF1-48C —	— T050LF1-60C	**2655**
68	72	20 —	25 —	40 —	50 —	— 60	T050LB1-48R —	— T060LB1-60R	**2680**	T050LF1-48C —	— T060LF1-60C	**2680**
80	85	25 —	30 —	50 —	60 —	— 75	T060LB1-48S —	— T075LB1-60S	**3705**	T060LF1-48D —	— T075LF1-60D	**3705**
104	105	30 —	40 —	60 —	75 —	— 100	T075LB1-48T —	— T100LB1-60T	**3735**	T075LF1-48D —	— T100LF1-60D	**3735**
130	142	40 —	50 —	75 —	100 —	— 125	T100LB1-48V —	— T125LB1-60V	**5075**	T100LF1-48D —	— T125LF1-60D	**5075**
156	175	50 —	60 —	100 —	125 —	— 150	T125LB1-48X —	— T150LB1-60X	**5720**	T125LF1-48E —	— T150LF1-60E	**5720**
192	210	60 —	75 —	125 —	150 —	— 200	T150LB1-48Y —	— T200LB1-60Y	**6170**	T150LF1-48E —	— T200LF1-60E	**6170**
248	250	75 —	100 —	150 —	200 —	— 250	T200LB1-48A —	— T250LB1-60Z	**6650**	T200LF1-48E —	— T250LF1-60E	**6650**
302	300	100 —	100 —	150 —	250 —	— 300	T250LB1-48B —	— T300LB1-60B	**7580**	T250LF1-48F —	— T300LF1-60F	**7580**
361	370	125 —	150 —	200 —	300 —	— 350	T300LB1-48DM① —	— T350LB1-60CM①	**8860**	T300LF1-48FM① —	— T350LF1-60FM①	**8860**
414	400	— —	— —	250 —	350 —	— 400	T350LB1-48EM① —	— T400LB1-60DM①	**11,300**	T350LF1-48FM① —	— T400LF1-60FM①	**11,300**
480	470	150 —	200 —	300 —	400 —	— 500	T400LB1-48FM① —	— T500LB1-60EM①	**11,800**	T400LF1-48GM① —	— T500LF1-60GM①	**11,800**
590	570	200 —	250 —	350 —	500 —	— 600	T500LB1-48GM① —	— T600LB1-60GM①	**14,550**	T500LF1-48HM① —	— T600LF1-60H①	**14,550**
720	720	250 —	300 —	450 —	600 —	— 700	T600LB1-48JM① —	— T700LB1-60JM①	**16,030**	T600LF1-48HM① —	— T700LF1-60H①	**16,030**
840	840	300 —	350 —	500 —	700 —	— 800	T700LB1-48KM① —	— T800LB1-60JM①	**19,400**	T700LF1-48JM① —	— T800LF1-60J①	**19,400**
960	—	350 —	400 —	— —	800 —	— 900	T800LB1-48KM① —	— T900LB1-60KM①	**27,500**	T800LF1-48JM① —	— T900LF1-60J①	**27,500**
1062	1050	400 —	450 —	600 —	900 —	— 1000	T900LB1-48KM① —	— T1000LB1-60KM①	**28,200**	T900LF1-48KM① —	— T1000LF1-60K①	**28,200**

① Includes integrated shunt rated (AC1) bypass contactor as standard. For across the line rated (AC3) bypass contactors, see page 6.30.

Enclosed
NEMA 1, Combination
Inside Delta, 7.5 – 1900 HP

Connected Inside Delta

Max. motor current		Maximum horsepower					NEMA1, 480V Circuit breaker	NEMA1, 600V Circuit breaker		NEMA1, 480V Fused disconnect	NEMA 1, 600V Fused disconnect	
UL	IEC	208V	240V	380V	480V	600V	Catalog Number	Catalog Number	List Price	Catalog Number	Catalog Number	List Price
28	30	7.5 —	10 —	15 —	20 —	— 25	T020DB1-48J —	— T025DB1-60J	**$ 2065**	T020DF1-48B —	— T025DF1-60B	**$ 2065**
34	37	10 —	10 —	20 —	25 —	— 30	T025DB1-48K —	— T030DB1-60K	**2080**	T025DF1-48B —	— T030DF1-60B	**2080**
42	44	10 —	15 —	25 —	30 —	— 40	T030DB1-48L —	— T040DB1-60L	**2255**	T030DF1-48C —	— T040DF1-60C	**2255**
54	50	15 —	20 —	30 —	40 —	— 50	T040DB1-48N —	— T050DB1-60N	**2285**	T040DF1-48C —	— T050DF1-60C	**2285**
68	72	20 —	25 —	40 —	50 —	— 60	T050DB1-48R —	— T060DB1-60R	**2315**	T050DF1-48C —	— T060DF1-60C	**2315**
80	85	25 —	30 —	50 —	60 —	— 75	T060DB1-48S —	— T075DB1-60S	**3055**	T060DF1-48D —	— T075DF1-60D	**3055**
104	105	30 —	40 —	60 —	75 —	— 100	T075DB1-48T —	— T100DB1-60T	**3080**	T075DF1-48D —	— T100DF1-60D	**3080**
130	142	40 —	50 —	75 —	100 —	— 125	T100DB1-48V —	— T125DB1-60V	**3905**	T100DF1-48D —	— T125DF1-60D	**3905**
156	175	50 —	60 —	100 —	125 —	— 150	T125DB1-48X —	— T150DB1-60X	**4535**	T125DF1-48E —	— T150DF1-60E	**4535**
192	210	60 —	75 —	125 —	150 —	— 200	T150DB1-48Y —	— T200DB1-60Y	**5675**	T150DF1-48E —	— T200DF1-60E	**5675**
248	250	75 —	100 —	150 —	200 —	— 250	T200DB1-48A —	— T250DB1-60Z	**5720**	T200DF1-48E —	— T250DF1-60E	**5720**
302	300	100 —	100 —	150 —	250 —	— 300	T250DB1-48B —	— T300DB1-60B	**6870**	T250DF1-48F —	— T300DF1-60F	**6870**
361	370	125 —	150 —	200 —	300 —	— 350	T300DB1-48D —	— T350DB1-60C	**7450**	T300DF1-48F —	— T350DF1-60F	**7450**
414	400	— —	— —	250 —	350 —	— 400	T350DB1-48E —	— T400DB1-60D	**8680**	T350DF1-48F —	— T400DF1-60F	**8680**
480	470	150 —	200 —	300 —	400 —	— 500	T400DB1-48F —	— T500DB1-60E	**9180**	T400DF1-48G —	— T500DF1-60G	**9180**
590	570	200 —	250 —	350 —	500 —	— 600	T500DB1-48GM① —	— T600DB1-60GM①	**11,460**	T500DF1-48HM① —	— T600DF1-60HM①	**11,460**
720	720	250 —	300 —	450 —	600 —	— 700	T600DB1-48JM① —	— T700DB1-60JM①	**12,900**	T600DF1-48HM① —	— T700DF1-60HM①	**12,900**
840	840	300 —	350 —	500 —	700 —	— 800	T700DB1-48KM① —	— T800DB1-60JM①	**15,850**	T700DF1-48JM① —	— T800DF1-60JM①	**15,850**
960	—	350 —	400 —	— —	800 —	— 900	T800DB1-48KM① —	— T900DB1-60KM①	**17,330**	T800DF1-48JM① —	— T900DF1-60JM①	**17,330**
1062	1050	400 —	450 —	600 —	900 —	— 1000	T900DB1-48KM① —	— T1000DB1-60KM①	**18,030**	T900DF1-48KM① —	— T1000DF1-60KM①	**18,030**
1247	1215	400 —	500 —	800 —	1000 —	— 1200	T1000DB1-48LM① —	— T1200DB1-60LM①	**20,830**	T1000DF1-48KM① —	— T1200DF1-60KM①	**20,830**
1454	1370	500 —	600 —	900 —	1200 —	— 1500	T1200DB1-48MM① —	— T1500DB1-60MM①	**22,900**	T1200DF1-48LM① —	— T1500DF1-60LM①	**22,900**
1839	1823	600 —	700 —	1200 —	1500 —	— 1800	T1500DB1-48NM① —	— T1800DB1-60NM①	**33,500**	T1500DF1-48NM① —	— T1800DF1-60NM①	**33,500**

① Includes integrated shunt rated (AC1) bypass contactor as standard. For across the line rated (AC3) bypass contactors, see page 6.30.

Options

Max FLA		Shunt rated (AC1) bypass or isolation contactor	Across the line rated (AC3) ④ bypass contactor	Start/Stop pushbuttons	HOA Selector Switch	Run pilot Light	NEMA 12 adder	NEMA 3R adder	NEMA 4 adder	NEMA 4X adder
UL	IEC	List price	List price ③	List price	List price	List price	List price	List price	List price	List price
18	18	**$ 150**	**$ 775**	**$ 72**	**$ 72**	**$ 135**	**$ 100** ①	**$ 100** ①	**$ 150** ①	**$ 450** ①
28	30	**175**	**850**	**72**	**72**	**135**	**100** ①	**100** ①	**150** ①	**450** ①
34	37	**250**	**900**	**72**	**72**	**135**	**150** ①	**150** ①	**200** ①	**600** ①
42	44	**300**	**950**	**72**	**72**	**135**	**150** ①	**150** ①	**200** ①	**600** ①
54	50	**350**	**1000**	**72**	**72**	**135**	**150** ①	**150** ①	**200** ①	**600** ①
68	72	**400**	**1100**	**72**	**72**	**135**	**150** ①	**150** ①	**200** ①	**600** ①
80	85	**500**	**1150**	**72**	**72**	**135**	**150** ①	**150** ①	**225** ①	**775** ①
104	105	**550**	**1200**	**72**	**72**	**135**	**175** ①	**175** ①	**225** ①	**775** ①
130	142	**600**	**1550**	**72**	**72**	**135**	**300** ①	**300** ①	**350** ①	**1050** ①
156	150	**950**	**1850**	**72**	**72**	**135**	**300** ①	**300** ①	**350** ①	**1050** ①
192	210	**950**	**2100**	**72**	**72**	**135**	**450** ①	**450** ①	**525** ①	**1575** ①
248	250	**1250**	**2700**	**72**	**72**	**135**	**450** ①	**450** ①	**525** ①	**1575** ①
302	300	**2100**	**3500**	**72**	**72**	**135**	**650** ①	**650** ①	**775** ①	**2325** ①
361	370	—②	**4800**	**72**	**72**	**135**	**650**	**650**	**775**	**2325**
414	400	—②	**4800**	**72**	**72**	**135**	**750**	**750**	**950**	**2850**
480	470	—②	**4800**	**72**	**72**	**135**	**850**	**850**	**1025**	**3075**
590	570	—②	**6800**	**72**	**72**	**135**	**1000**	**1000**	**1300**	**3900**
720	720	—②	**7100**	**72**	**72**	**135**	**1000**	**1000**	**1300**	**3900**
840	840	—②	**10,100**	**72**	**72**	**135**	**1100**	**1100**	**1425**	**4275**
960	—	—②	**10,100**	**72**	**72**	**135**	**1300**	**1300**	**1700**	**5100**
1062	1050	—②	**14,600**	**72**	**72**	**135**	**1300**	**1300**	**1700**	**5100**
1247	1215	—②	**14,600**	**72**	**72**	**135**	**1300**	**1300**	**1700**	**5100**
1454	1370	—②	**14,600**	**72**	**72**	**135**	**1750**	**1750**	**2200**	**7000**
1839	1823	—②	**14,600**	**72**	**72**	**135**	**1750**	**1750**	**2200**	**7000**

① Must add bypass contactor.
② PSTB includes an integrated shunt rated (AC1) bypass contactor.
③ Includes emergency bypass control.
④ Subtract AC1 List price when AC1 rating ("M" code) is included in catalog numbers shown on page 6.26.

Accessories

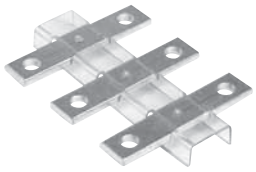

LX400

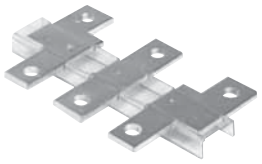

LW185

LT185-AC

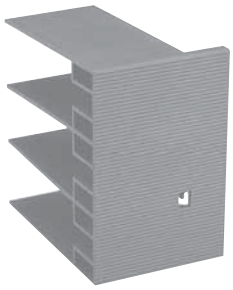

LT460-AC

PSTEK

Terminal extension pieces (set of 3) ③

Softstarter Type	Dimensions Hole (mm)	Bar (mm)	Weight lbs.		Catalog number	List price
PST85 – 142	8.5	17.5 x 5	0.55		LX185	**$ 90**
PST175 – 300	10.5	20 x 5	0.77		LX300	**140**
PST370 – 470	10.5	25 x 5	1.1		LX460	**195**
PST570 – 1050	13	40 x 6	1.9		LX750	**225**

Delivered with straps to prevent them from rotating.

Terminal enlargement pieces (set of 3) ③

Softstarter Type	Dimensions Hole (mm)	Bar (mm)	Weight lbs.		Catalog number	List price
PST30 – 72	6.5	15 x 3	0.22		LW110	**$ 15**
PST85 – 142	10.5	17.5 x 5	0.55		LW185	**120**
PST175 – 300	10.5	20 x 5	0.99		LW300	**130**
PST370 – 470	10.5	25 x 5	1.6		LW460	**295**
PST570 – 1050	13	40 x 6	2.7		LW750	**355**

Delivered with straps to prevent them from rotating.

Terminal shrouds ③⑦

Softstarter Type	Required quantity	Weight lbs.		Catalog number	List price
PST85 – 142	(1) - LT185-AC & (1) LT460-AC	0.11 0.22		LT185-AC LT460-AC	**$ 10** **20**
PST85 – 142	(1) - LT185-AL & (1) LT460-AL	0.48 1.8		LT185-AL LT460-AL	**10** **20**
PST175 – 300	LT300-AC ⑤	0.15		LT300-AC	**10**
	LT300-AL ⑤	0.62		LT300-AL	**10**
PSTB370 – 470	LT460-AC	0.22		LT460-AC	**20**
	LT460-AL	1.8		LT460-AL	**20**
PSTB570 – 1050	LT750-AC	0.26		LT750-AC	**20**
	LT750-AL	1.8		LT750-AL	**20**

Control transformers

PST Amp ratings	Standard VA	Price adder for extra VA			
		100VA	250VA	500VA	750VA
9 – 68	50	**$ 175**	—	—	—
69 – 130	75	**225**	**$ 300**	—	—
131 – 480	250	**360**	**400**	**$ 500**	**$ 625**
481 – 1050	750	—	**725**	—	**975**

Terminal lug kits ①

Wire range	For softstarter ②		Catalog number	List price
#6 - 250 MCM (1 per phase)	PST85 – PST142		PSLK-185 ④⑥	**$ 150**
#4 - 400 MCM (1 per phase)	PST175 – PST300		PSLK-300 ④⑥	**195**
#4 - 500 MCM (2 per phase)	PST175 – PST300		PSLK-300/2 ④⑥	**280**
2/0 - 500 MCM (2 per phase)	PSTB370 – PSTB470		PSLK-580/2	**350**
2/0 - 500 MCM (3 per phase)	PSTB570 – PSTB1050		PSLK-750/3	**525**

Remote key pad (HMI) – 10 ft. cable included

Softstarter type	Dimensions H x W x D (inches)	Weight (lbs.)		Catalog number	List price
All PST(B)	5.43 x 5.3 x 0.9	1		PSTEK	**$ 385**

① Includes line/load lugs and hardware.
② Softstarters listed are provided with terminating bus tabs as standard.
③ Use Discount Schedule ABA.
④ Must order two sets if using bypass contactor.
⑤ Requires two sets.
⑥ Discount schedule PSS
⑦ All shrouds come in quantities of 2.

Accessories

Accessories

Item	Suffix code ①	List price adder
Softstarters		
Door mounted reset	K	**$ 72**
E-Stop	T	**72**
Start-stop pushbutton	A	**72**
2 position selector switch	C	**72**
3 position selector switch	D	**72**
Pilot light run	E	**135**
Start-stop pushbutton & pilot light	F	**207**
2 position selector switch & pilot light	H	**207**
3 position selector switch & pilot light	J	**207**
Shunt rated (AC1) bypass contactor	M	see pg 6.30
Isolation contactor	W	see pg 6.30
Across the line rated (AC3) contactor with emergency bypass control ③	B	see pg 6.30
Remote keypad	R	**485**
Service entrance, 3-wire	SE3	**100**
Service entrance, 4-wire	SE4	**300**
Lightning arrestor	LA	**320**
Space heater, 100W with thermostat	SH	**600**
Emergency bypass control for PSTB ③	X	**600**
Auxiliary relays		
Type N control relay (4 pole)	CR	**150**
Electronic timer		
1.5 – 30s On Delay	TN30	**125**
5 – 100s On Delay	TN100	**125**
1.5 – 30s Off Delay	TF30	**125**
5 – 100s Off Delay	TF100	**125**
Phase failure phase reversal ②	PFPR	**375**
Undervoltage relay	UV	**150**
Overvoltage relay	OV	**180**
Ground fault protection	GFP	**1000**
Meters & metering		
Current transformer	CT	**250**
Ammeter (including C.T.)	AM	**470**
Ammeter & ammeter switch	AMS	**1800**
Voltmeter	VM	**1200**
Voltmeter & voltmeter switch	VMS	**1800**
Elapsed time meter	ETM	**350**
Operation counter	OC	**375**
Wattmeter	WM	**2450**

Additional auxiliary contact blocks for bypass or isolation contactors

Contact configuration	Suffix code	List price adder
1 N.O. & 1 N.C.	11	**$ 54**
2 N.O. & 2 N.C.	22	**98**
3 N.O. & 3 N.C.	33	**142**

① Add the suffix code after the last digit of the catalog number.
② Included as standard in the PST.
③ Control includes panel mounted Norm/E-Bypass switch, START/STOP pushbutton & Class 10 external overload, unless otherwise specified.

Accessories
Communications
DeviceNet Fieldbus connectors & accessories

DNP21-11FBP

DNF-11FBP.050

DNM-11FBP.050

DNX11-FBP

DNM11-FBP.0

DNF11-FBP.0

DeviceNet FieldBusPlug

Designation FieldBusPlug	Cable length	Weight lbs	Type	Catalog number	List price
DeviceNet	0.25 m	.20	DNP21-FBP.025	1SAJ230000R0003	**$ 286.47**
DeviceNet	0.50 m	.22	DNP21-FBP.050	1SAJ230000R0005	**286.47**
DeviceNet	1.00 m	.29	DNP21-FBP.100	1SAJ230000R0010	**286.47**
DeviceNet	5.00 m	.79	DNP21-FBP.500	1SAJ230000R0050	**304.83**

Ready-made DeviceNet fieldbus interface with various cable lengths
- Applicable on all FBP motor starters and other devices
- Degree of protection IP65, diagnostic LED

DeviceNet round cable for bus junctions

Designation	Cable length	Weight lbs	Type	Catalog number	List price
DeviceNet round cable with female connector	0.50 m	.09	DNF11-FBP.050	1SAJ923002R0005	**$ 48.21**
DeviceNet round cable with male connector	0.50 m	.09	DNM11-FBP.050	1SAJ923003R0005	**49.96**

Ready made bus cable with an M12 connector and an open cable end.
- Applicable on all bus junctions such as DeviceNet couplers or devices with an integrated DeviceNet interface.

DeviceNet round cable for bus extension

Designation	Cable length	Weight lbs	Type	Catalog number	List price
DeviceNet extension cable	1 m	0.18	DNX11-FBP.100 ②	1SAJ923001R0010	**$ 70.93**
	3 m	0.44	DNX11-FBP.300 ②	1SAJ923001R0030	**114.96**
	5 m	0.68	DNX11-FBP.500 ③	1SAJ923001R0050	**148.74**
	100 m	12.30	DNC11-FBP.999 ③	1SAJ923004R1000	**1517.12**

DeviceNet round cable and accessories for bus extension – Bus cable & coupling accessories

Designation	Weight lbs		Type	Catalog number	List price
DeviceNet round cable male connector	.33		DNM11-FBP.0 ①	1SAJ923005R0001	**$ 108.56**
DeviceNet round cable female connector	.33		DNF11-FBP.0 ①	1SAJ923006R0001	

DeviceNet termination resistor

Designation	Weight lbs		Type	Catalog number	List price
DeviceNet termination resistor, 120 Ohm	.05		DNR11-FBP.120	1SAJ923007R0001	**$ 37.22**

To connect the PST Softstarter to a fieldbus system
You need specific software for PLC setup which is available free from the ABB Inc. web site; see the Resources section at the bottom of the Softstarter product page at www.abb-control.com/products/softstarters.htm. If you need help or advice, please contact your local ABB office.

① Includes five connectors.
② Ready made bus cable with M12 male and female connectors.
③ Cable only. Connectors not provided.

Accessories
Communications
Profibus DP Fieldbus connectors & accessories

PDP21-FBP

PDF11-FBP.050

PDM11-FBP.050

PDX11-FBP

PDM11-FBP.0

PDF11-FBP.0

Profibus DP FieldBusPlug

Designation FieldBusPlug	Cable length	Weight lbs		Type	Catalog number	List price
Profibus DP-FBP	0.25 m	.20		PDP21-FBP.025	1SAJ240000R0003	**$ 390.39**
Profibus DP-FBP	0.50 m	.22		PDP21-FBP.050	1SAJ240000R0005	**390.39**
Profibus DP-FBP	1.00 m	.29		PDP21-FBP.100	1SAJ240000R0010	**390.39**
Profibus DP-FBP	5.00 m	.79		PDP21-FBP.500	1SAJ240000R0050	**409.43**

Ready-made Profibus DP fieldbus interface with various cable lengths.
- Applicable on all FBP motor starters and other devices.
- Degree of protection IP65, diagnostic LED.

Profibus DP round cable for bus junctions

Designation	Cable length	Weight lbs	Type	Catalog number	List price
Profibus DP round cable with female connector	0.50 m	.09	PDF11-FBP.050	1SAJ924002R0005	**$ 45.70**
Profibus DP round cable with male connector	0.50 m	.09	PDM11-FBP.050	1SAJ924003R0005	

Ready made bus cable with an M12 connector an an open cable end.
- Applicable on all bus junctions such as Profibus DB couplers or devices with an integrated Profibus DB interface.

Profibus DP round cable for bus extension

Designation	Cable length	Weight lbs	Type	Catalog number	List price
Profibus DP extension cable	1 m	0.18	PDX11-FBP.100 ①	1SAJ924001R0010	**$ 64.75**
	3 m	0.44	PDX11-FBP.300 ①	1SAJ924001R0030	**99.03**
	5 m	0.68	PDX11-FBP.500 ①	1SAJ924001R0050	**133.30**
	100 m	12.30	PDC11-FBP.999 ②	1SAJ924004R1000	**1416.82**

Profibus DP accessories for bus extension

Designation	Weight lbs		Type	Catalog number	List price
Profibus DP male connector	.07		PDM11-FBP.0	1SAJ924005R0001	**$ 38.09**
Profibus DP female connector	.07		PDF11-FBP.0	1SAJ924006R0001	

Profibus DP termination resistor

Designation	Weight lbs		Type	Catalog number	List price
Profibus DP termination resistor, 150 Ohm	.02		PDR11-FBP.150	1SAJ924007R0001	**$ 251.16**

To connect the PST Softstarter to a fieldbus system
You need specific software for PLC setup which is available free from the ABB Inc. web site; see the Resources section at the bottom of the Softstarter product page at www.abb-control.com/products/softstarters.htm. If you need help or advice, please contact your local ABB office.

① Ready made bus cable with M12 male and female connectors.
② Cable only. Connectors not provided.

Accessories
Communications
Modbus RTU Fieldbus connectors & accessories

DNP21-11FBP

DNF-11FBP.050

DNM-11FBP.050

DNX11-FBP

DNM11-FBP.0

DNF11-FBP.0

Modbus FieldBusPlug

Designation FieldBusPlug	Cable length	Weight lbs	Type	Catalog number	List price
Modbus RTU-FBP	0.25 m	.20	MPR21-FBP.025	1SAJ250000R0003	**$ 333.44**
Modbus RTU-FBP	0.50 m	.22	MPR21-FBP.050	1SAJ250000R0005	**338.25**
Modbus RTU-FBP	1.00 m	.29	MPR21-FBP.100	1SAJ250000R0010	**343.32**
Modbus RTU-FBP	5.00 m	.79	MPR21-FBP.500	1SAJ250000R0050	**355.11**

Ready-made Modbus fieldbus interface with various cable lengths
- Applicable on all FBP motor starters and other devices
- Degree of protection IP65, diagnostic LED

Modbus round cable for bus junctions ②

Designation	Cable length	Weight lbs	Type	Catalog number	List price
Modbus round cable with female connector	0.50 m	.09	DNF11-FBP.050	1SAJ923002R0005	**$ 48.21**
Modbus round cable with male connector	0.50 m	.09	DNM11-FBP.050	1SAJ923003R0005	**49.96**

Ready made bus cable with an M12 connector and an open cable end.
- Applicable on all bus junctions such as Modbus couplers or devices with an integrated Modbus interface.

Modbus round cable for bus extension ②

Designation	Cable length	Weight lbs	Type	Catalog number	List price
Modbus extension cable	1 m	0.18	DNX11-FBP.100 ③	1SAJ923001R0010	**$ 70.93**
	3 m	0.44	DNX11-FBP.300 ③	1SAJ923001R0030	**114.96**
	5 m	0.68	DNX11-FBP.500 ③	1SAJ923001R0050	**148.74**
	100 m	12.30	DNC11-FBP.999 ④	1SAJ923004R1000	**1517.12**

Modbus round cable and accessories for bus extension ② – Bus cable & coupling accessories

Designation	Weight lbs		Type	Catalog number	List price
Modbus round cable male connector	.33		DNM11-FBP.0 ①	1SAJ923005R0001	**$ 108.56**
Modbus round cable female connector	.33		DNF11-FBP.0 ①	1SAJ923006R0001	

Modbus termination resistor ②

Designation	Weight lbs		Type	Catalog number	List price
Modbus termination resistor, 120 Ohm	.05		DNR11-FBP.120	1SAJ923007R0001	**$ 37.22**

To connect the PST Softstarter to a fieldbus system
You need specific software for PLC setup which is available free from the ABB Inc. web site; see the Resources section at the bottom of the Softstarter product page at www.abb-control.com/products/softstarters.htm. If you need help or advice, please contact your local ABB office.

① Includes five connectors.
② Modbus accessories are the same as DeviceNet accessories.
③ Ready made bus cable with M12 male and female connectors.
④ Cable only. Connectors not provided.

Technical data
PST30 – 300
PSTB370 – 1050

	PST30 – 300	PSTB370 – 1050
Rated insulation voltage U_i	690 V	690 V
Rated operational voltage U_e	208 – 690 V	208 – 690 V
Starting capacity		
at max rated current I_r	500% for 30 sec	500% for 30 sec
Number of starts per hour	30 ①	10 ①
Overload capability		
Overload Class	10 – 30	10 – 30
Service factor	115 %	115 % (PSTB370 – PSTB840) 100 % (PSTB1050)
Ambient temperature		
During operation	±0… +50 °C ②	±0… +50 °C ②
During storage	-25… +70 °C	-25… +70 °C
Altitudes		
Maximum altitude	4000 m ③	4000 m ③
Degree of protection		
Main circuit	IP10 (PST30 ... 72) IP00 (PST85 ... 300)	IP00 (all)
Supply and Control circuit	IP20	IP20
Main circuit		
Built in By-pass contactor	No	Yes
Cooling system - Fan cooled (thermostat controlled)	Yes	Yes
Supply circuit		
Control voltage – one range	100 ... 250 V, +10% / -15% 50/60 Hz ± 5%	100 ... 250 V +10% / -15% 50/60 Hz ± 5%
HMI for settings (Human Machine Interface)		
20 segment display	Yes	Yes
Keypad with two selection keys and two navigating keys	Yes	Yes
Plain text in 12 languages (English, German, Italian, Chinese, Finnish, Swedish, French, Spanish, Dutch, Russian, Turkish & Portuguese)	Yes	Yes
Remote HMI for settings (PSTEK) (Human Machine Interface)		
20 segment display	Yes	Yes
Keypad with two selection keys and two navigating keys	Yes	Yes
Plain text in 12 languages (English, German, Italian, Chinese, Finnish, Swedish, French, Spanish, Dutch, Russian, Turkish & Portuguese)	Yes	Yes
Approvals: UL, Type 1, 12, 4/4X		
Upload Parameters	Yes	Yes

	PST30 – 300	PSTB370 – 1050
Signal relays		
Number of programmable signal relays (Each relay can be programmed to be Run, By-pass or Event signal)	3	3
K4 – Default as Run signal	Yes	Yes
K5 – Default as By-pass signal	Yes	Yes
K6 – Default as Event signal	Yes	Yes
Rated operational voltage U_e	250 V	250 V
Rated thermal current I_{th}	5 A	5 A
Rated operational current I_e at AC-15 (U_e = 250 V)	1.5 A	1.5 A
Control circuit /Hardware inputs		
Internal 24 V DC (10 mA closed)	Yes	Yes
Start / Stop inputs	Yes	Yes
Two extra programmable inputs (Each input can be programmed to be None, Reset, Enable, Jog, DOL or Start motor 2 (or 3)).	Yes	Yes
Signal indication LED's		
Run power on – Green	Yes	Yes
Fault - Red	Yes	Yes
Protection - Yellow	Yes	Yes
Protections		
Electronic overload	Yes	Yes
Adjustable tripping classes - Class 10 A, 10, 20 and 30	Yes	Yes
Dual ramp (separate overload function for start and run)	Yes	Yes
PTC connection	Yes	Yes
Locked rotor protection	Yes	Yes
Underload protection	Yes	Yes
Phase imbalance	Yes	Yes
High current (8 x I_e)	Yes	Yes
Phase reversal protection	Yes	Yes
Warnings (pre-warning)		
High current	Yes	Yes
Low current (underload)	Yes	Yes
Overload trip	Yes	Yes
Overtemp. thyristors (SCR)	Yes	Yes
Start of several motors		
Possible to set up and start three different motors	Yes	Yes
Field bus connection		
Connection for ABB FielBusPlug	Yes	Yes
AS-I (option cable)	Yes	Yes
DeviceNet (option cable)	Yes	Yes
Profibus DP (option cable)	Yes	Yes

PSTB Integrated bypass ratings

		PSTB370	PSTB470	PSTB570	PSTB720	PSTB840	PSTB1050
Contactor type		AF260	AF300	AF400	AF580	AF750	AF750
AC3 Rating @ 480V	HP	200	250	350	500	600	600
AC3 Rating	A	248	302	414	590	720	720

① Valid for 50 % on time and 50 % off time, with 3.5 x I_e for 7 seconds. If other data is required, please contact your sales office
② Above 40 ºC up to max. 50 ºC reduce the rated current by 0.8 % per ºC.
③ When used at high altitudes above 1000 meters, consult factory.

Major possible settings and the displayed text and the set default values

Description	Text on display (Eng)	Values on display	Default value
Motor FLA	Setting I_e	9.0 ...1380 A divided into 19 overlapping ranges.	See table, page 6.38
Time for start ramp	Start Ramp	1 ... 30 s, 1 ... 120 s (Range depends on Start Range)	10 s
Time for stop ramp	Stop Ramp	0 ... 30 s, 0 ... 120 s (Range depends on Stop Range)	0 s
Initial voltage for start ramp	Init Volt	30 ... 70 %	30 %
End voltage for stop ramp	End Volt	30 ... 70 %	30 %
Step down voltage	Step Down	30 ...100 %	100 %
Level of the current limit.	Current Lim	2.0 ... 5.0 x I_e	4.0 x I_e
Selection of Kick start	Kick Start	Yes, No	No
Level of Kick start if selected	Kick Level	50 ... 100 %	50 %
Time for Kick start if selected	Kick Time	0.1 ... 1.5 s	0.2
Selectable range for start ramp	Start Range	1 ... 30 s, 1...120 s	1 ... 30 s
Selectable range for stop ramp	Stop Range	0 ... 30 s, 0 ... 120 s	0 ... 30 s
Overload protection	Overload	No, Normal, Dual	Normal
Overload Class	OL Class	10A, 10, 20, 30	10
Overload Class, Dual type, Start Class	OL Class S	10A, 10, 20, 30	10
Overload Class, Dual type, Run Class	OL Class R	10A, 10, 20, 30	10
Type of operation for overload protection	OL Op	Stop-M, Stop-A, Ind	Stop-M
Locked rotor protection	Locked Rotor	Yes, No	No
Trip level for locked rotor protection	Lock R Lev	3.0 ... 8.0 x I_e	4.0 x I_e
Trip time for locked rotor protection	Lock R Time	0.2 ... 10 s	1.0 s
Type of operation for locked rotor protection	Lock R Op	Stop-M, Stop-A, Ind	Stop-M
Underload protection	Underload	Yes, No	No
Trip level for Underload protection	Underl Lev	0.4 ... 0.8 x I_e	0.8 x I_e
Trip time for Underload protection	Underl Time	1...30 s	10 s
Type of operation for Underload protection	Underl Op	Stop-M, Stop-A, Ind	Stop-M
Phase imbalance protection	Phase Imb	Yes, No	No
Trip level for phase imbalance protection	Ph Imb Lev	10...80 %	80 %
Type of operation for phase imbalance protection	Ph Imb Op	Stop-M, Stop-A, Ind	Stop-M
High current protection	High I	Yes, No	No
Type of operation for high current protection	High I Op	Stop-M, Stop-A, Ind	Stop-M
Phase reversal protection	Phase Rev	Yes, No	No
Type of operation for phase reversal protection	Ph Rev Op	Stop-M, Stop-A, Ind	Stop-M
PTC protection	PTC	Yes, No	No
Type of operation for PTC protection	PTC Op	Stop-M, Stop-A	Stop-M
An external Bypass contactor is used	Ext ByPass	Yes, No	No
High current warning	Warn I=High	Yes, No	No
Trip level for high current warning	Wa I=H Lev	0.5 ... 5.0 x I_e	1.2 x I_e
Low current warning	Warn I=Low	Yes, No	No
Trip level for low current warning	Wa I=L Lev	0.4 ...1.0 x I_e	0.5 x I_e
Overload warning	Warn OL	Yes, No	No
Trip level for overload warning	Wa OL Lev	40...99 %	90 %
Thyristor overload warning	Warn SCR OL	Yes, No	Yes
Type of operation for phase loss fault	Ph Loss Op	Stop-M, Stop-A	Stop-M
Type of operation for by-pass fault	BP Fault Op	Stop-M, Stop-A, Ind	Stop-M
Type of operation for fieldbus fault	FB Fault Op	Stop-M, Stop-A	Stop-M
Type of operation for frequency fault	Freq F Op	Stop-M, Stop-A	Stop-M
Type of operation for heat sink over temperature fault	HS Temp Op	Stop-M, Stop-A	Stop-M
Type of operation for thyristor short circuit fault	SCR SC Op	Stop-M, Stop-A	Stop-M
Function of programmable input In_0	In0	None, Reset, Enable, Jog, DOL, Start 2	Reset
Function of programmable input In_1	In1	None, Reset, Enable, Jog, DOL, Start 3	Reset
Function of programmable relay output K4	Relay K4	Run, TOR, Event	Run
Function of programmable relay output K5	Relay K5	Run, TOR, Event	TOR
Function of programmable relay output K6	Relay K6	Run, TOR, Event	Event
Control of the softstarter with fieldbus	Fieldb Ctrl	Yes, No	No
Number of sequences for sequence start.	No of Seq	No, 2, 3	No
1st sequence, time for start ramp	Start Ramp1	1...30 s, 1...120 s (Range depends on Start Range)	10 s
1st sequence, initial voltage for start ramp	Init Volt1	30...70 %	30 %
1st sequence, current limit	Curr Lim1	2.0 ... 5.0 x I_e	4.0 x I_e
1st sequence, setting current	1st Set Ie	9.0 ... 1380 A divided into 19 overlapping ranges	See table, page 6.38
2nd sequence, time for start ramp	Start Ramp2	1...30 s, 1...120 s (Range depends on Start Range)	10 s
2nd sequence, initial voltage for start ramp	Init Volt2	30...70 %	30 %
2nd sequence, current limit	Curr Lim2	2.0 ... 5.0 x I_e	4.0 x I_e
2nd sequence, setting current	2nd Set Ie	9.0 ... 1380 A divided into 19 overlapping ranges	See table, page 6.38

Technical data
Display settings
Tripping curves

Major possible settings and the displayed text and the set default values

Description	Text on display (Eng)	Values on display	Default value
Time for start ramp	Start Ramp	1...30 s, 1...120 s (Range depends on Start Range)	10 s
Initial voltage for start ramp	Init Volt	30 ... 70 %	30 %
Current limit	Curr Lim	2.0 ... 5.0 x I_e	4.0 x I_e
Motor FLA	Set Ie	9.0 ... 1380 A divided into 19 overlapping ranges	See table, page 6.38
Language to use on display	Language	US/UK, FI, SE, PT, NL, IT, FR, ES, DE, CN	US/UK
Time for display automatic turn off	LCD Auto Off	1 ... 255 min	15 min
Password for display	Password	No, 1 ... 255	1
Type of date presentation	Date Type	ISO, CE, US	ISO
Year	Date Year	2001...2060	Individual
Month	Date Month	1 ...12	Individual
Day	Date Day	1 ... 31	Individual
Hour	Time Hour	0 ... 23	Individual
Minutes	Time Min	0 ... 59	Individual

Tripping curves for the integrated electronic overload

All units have an integrated electronic overload possible to set on four different tripping classes. Below, you will find a curve for each tripping class in cold state.

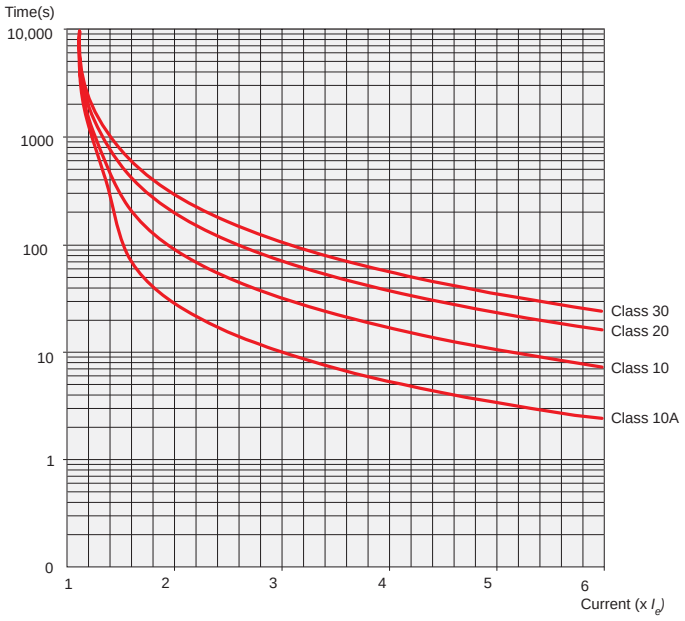

ABB FieldBusPlug
Controlling possibilities when using different field buses

Item	ASI	DeviceNet	Profibus DP
Simple control (start/stop etc)	X	X	X
Complete control	—	X	X
Simple status information	X	X	X
Detailed status information	—	X	X
Possibilities to write parameters	—	X	X
Possibilities to read parameters	—	X	—

For more detailed information, please refer to the LV021 (1SXU 132 021 M0201) Installation and Maintenance manual, available at ABB Inc. web site. See the Resources section at the bottom of the Softstarters product page at www.abb-control.com/products/softstarters.htm. Click on the Literature Library File Downloads link which will take you to the Softstarters section of the Literature Library. Right click on AC1006.9 to download the manual. If you need help or advice, please contact your local ABB office.

Technical data
PST30 – 300
PSTB370 – 1050

Cross section of connectable cables

		Type of softstarter PST30 ... 72	PST85 ... 142	PST175 ... 300	PSTB370 ... 470	PSTB570 ... 1050
Main circuit						
Available terminals:	L1, L2, L3	Yes	Yes	Yes	Yes	Yes
	T1, T2, T3	Yes	Yes	Yes	Yes	Yes
(For external by-pass):	B1, B2, B3	Yes	Yes	Yes	No	No
Connection clamp		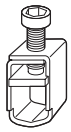				
Solid/Stranded	1 x mm^2	10 ... 95	See page 6.31	See page 6.31	See page 6.31	See page 6.31
Solid/Stranded	1 x mm^2	6 ... 35	See page 6.31	See page 6.31	See page 6.31	See page 6.31
Tightening torque (recommended), Nm		6.0	See page 6.31	See page 6.31	See page 6.31	See page 6.31
Connection bar		No	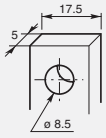	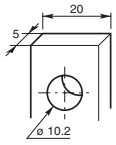	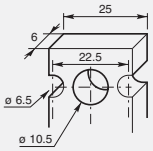	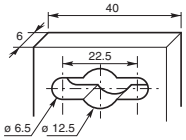
Width and thickness	mm	–				
Hole diameter	mm	–				
Tightening torque (recommended), Nm		–	9	18	40	49
Supply and control circuit						
Connection clamp		Yes	Yes	Yes	Yes	Yes
Solid/Stranded	1 x mm^2	2.5	2.5	2.5	2.5	2.5
Solid/Stranded	1 x mm^2	1.5	1.5	1.5	1.5	1.5
Tightening torque (recommended), Nm		0.5	0.5	0.5	0.5	0.5

Fuse ratings and power losses

For softstarter	Recommended ABB Overload protection Type	Current range A	Max power loss at rated I_e W	Maximum fuse ratings - main circuit Bussmann fuses A	Type	Holder	Ferraz fuses A	Type	Power requirements supply circuit VA/VA pull in
PST									
PST30	Integrated	9... 35	100	80	170M1366	170H1007	100	6.6 URB 000 D08V 0100	5
PST37	Integrated	12…46	120	125	170M1368	170H1007	160	6.6 URB 000 D08V 0160	5
PST44	Integrated	15…58	140	160	170M1369	170H1007	200	6.6 URD 30 D08A 0200	5
PST50	Integrated	15…58	160	160	170M1369	170H1007	200	6.6 URD 30 D08A 0200	5
PST72	Integrated	23…86	230	250	170M1371	170H1007	315	6.6 URD 30 D08A 0315	5
PST85	Integrated	30…115	270	315	170M1372	170H1007	400	6.6 URD 30 D08A 0400	10
PST105	Integrated	38…144	325	400	170M3019	170H3004	400	6.6 URD 30 D08A 0400	10
PST142	Integrated	45…173	435	450	170M3020	170H3004	500	6.6 URD 30 D08A 0500	10
PST175	Integrated	60…230	540	500	170M3021	170H3004	550	6.6 URD 30 D08A 0550	15
PST210	Integrated	75…288	645	630	170M5012	170H3004	630	6.6 URD 31 D08A 0630	15
PST250	Integrated	75…288	765	700	170M5013	170H3004	630	6.6 URD 31 D08A 0630	15
PST300	Integrated	90…345	920	900	170M5015	170H3004	900	6.6 URD 31 D11A 0900	15
PSTB – 600V									
PSTB370	Integrated	120…460	90	700	170M5013	170H3004	630	6.6 URD 31 D08A 0630	20/480
PSTB470	Integrated	150…575	110	900	170M5015	170H3004	900	6.6 URD 31 D11A 0900	20/480
PSTB570	Integrated	180…690	105	900	170M5015	170H3004	900	6.6 URD 31 D11A 0900	25/900
PSTB720	Integrated	225…863	110	1250	170M5018	170H3004	1250	6.6 URD 33 D11A 1250	25/860
PSTB840	Integrated	300…1160	170	1500	170M5018	170H3004	1600	6.6 URD 33 D11A 1250	25/860
PSTB1050	Integrated	360…1380	170	1800	170M6020	170H3004	2000	6.6 URD 233 PLAF 2000	25/860
PSTB – 690V									
PSTB370	Integrated	120…460	90	700	170M5013	170H3004	630	6.6 URD 31 D08A 0630	20/480
PSTB470	Integrated	150…575	110	900	170M5015	170H3004	900	6.6 URD 31 D11A 0900	20/480
PSTB570	Integrated	180…690	105	900	170M5015	170H3004	900	6.6 URD 31 D11A 0900	25/900
PSTB720	Integrated	225…863	110	1250	170M6018	170H3004	1250	6.6 URD 33 D11A 1250	25/860
PSTB840	Integrated	300…1150	170	1500	170M6018	170H3004	1600	6.6 URD 33 TTFA 1600	25/860
PSTB1050	Integrated	360…1380	170	1600	170M6019	170H3004	1600	6.6 URD 33 TTFA 1600	25/860

Circuit diagrams
PST30 – PST300
In-Line

PST30 – PST300

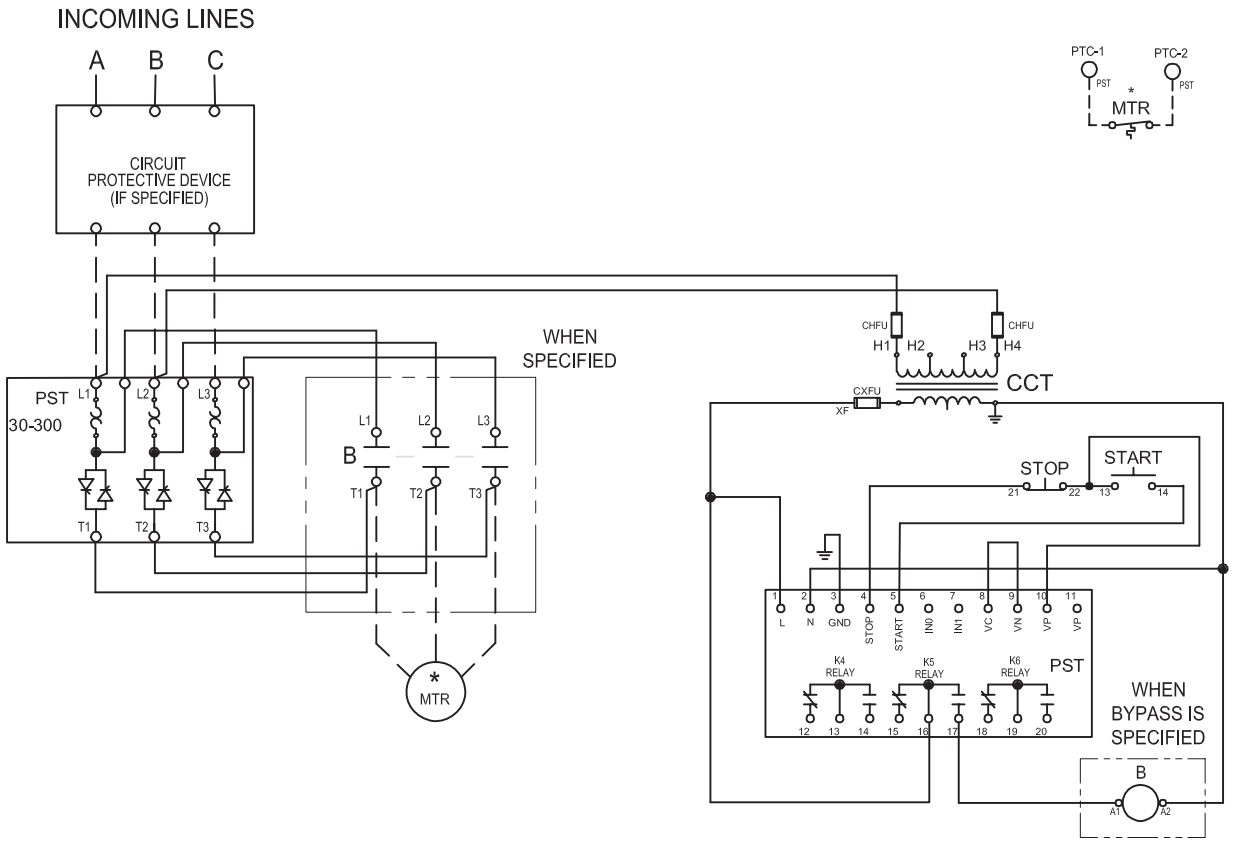

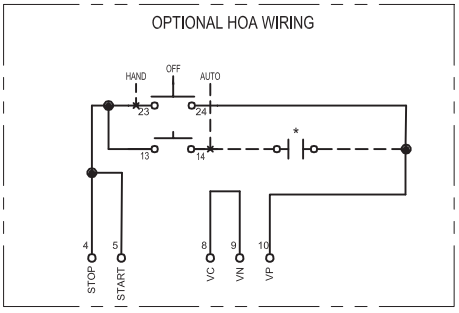

CONNECTION TORQUE: CONSULT SOFT STARTER MANUAL FOR WIRE TORQUE SPECIFICATIONS.

PST NOTES:
1. PROG. INPUT In0 FACTORY SET FOR RESET FAULT/OL.
2. PROG. RELAY K4 FACTORY SET FOR RUN.
3. PROG. RELAY K5 FACTORY SET FOR AT SPEED.
4. PROG. RELAY K6 FACTORY SET FOR EVENT.
5. FUNCTION MOT 1 Ie MUST BE SET TO MOTOR FLA.

LEGEND	
CCT	CONTROL CIRCUIT TRANSFORMER
CHFU	CCT PRIMARY FUSE
CXFU	CCT SECONDARY FUSE
B	BYPASS CONTACTOR
PTC	THERMAL COUPLE
o 13	CONN POINT ON DEVICE WITH NUMBER
*	REMOTE DEVICE
∅	CONNECTION POINT AT TERMINAL BLOCK

NOTES
1. ALL CONTROL WIRING TO BE 14 GA. COLOR OF CONTROL WIRE SHALL BE PER VOLTAGE ON CONTACTOR COILS:

   RED-ALL AC VOLTAGES
   WHITE MAY BE USED ON THE GROUNDED SIDE OF THE AC CIRCUIT IF SPECIFIED.

   BLUE-ALL DC VOLTAGES

2. ALL DEVICES ARE SHOWN DE-ENERGIZED.
3. DO NOT USE SELECTOR SWITCHES WITH AUTO-RESET OVERLOAD RELAYS.

Circuit diagrams
PST30 – PST300
Inside Delta

PST30 – PST300

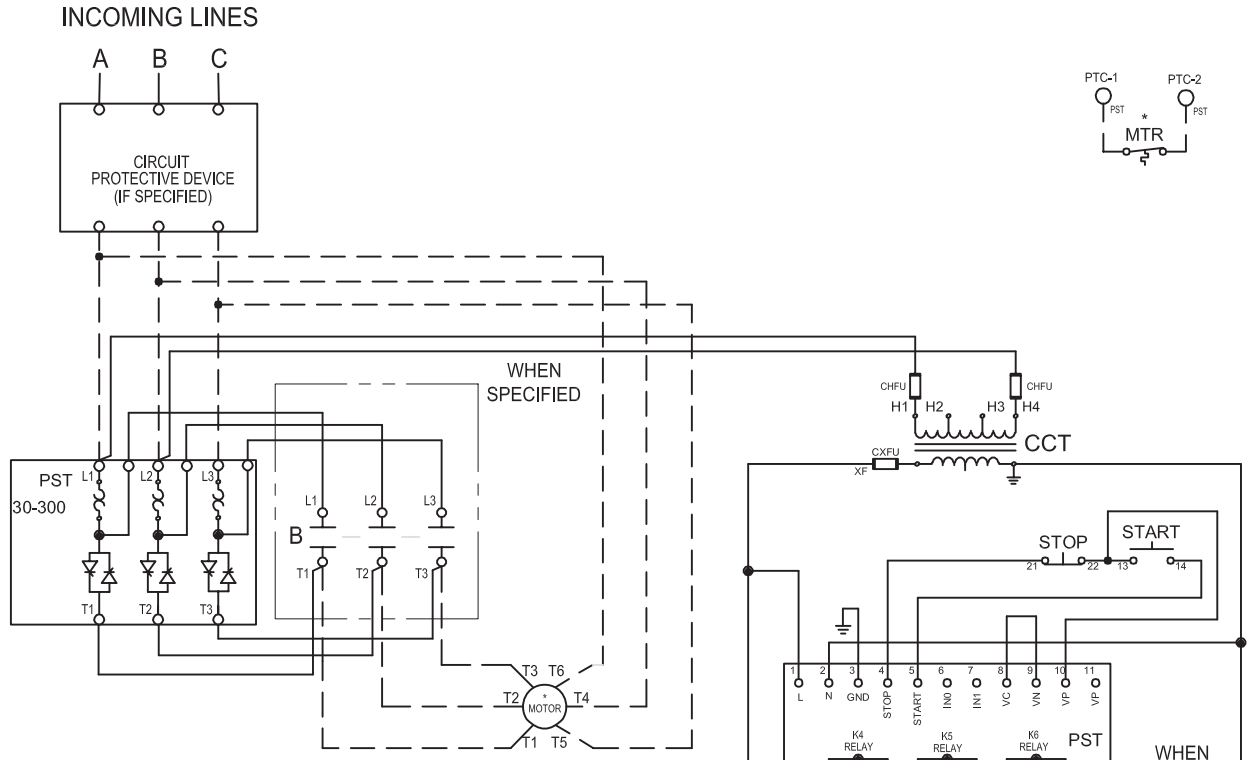

MOTOR MARKINGS ARE AS DEFINED BY NEMA MG1-2.62 FOR 12 LEAD WYE START, DELTA RUN MOTOR CONNECTIONS. ALWAYS CONFIRM CORRECT LEAD MARKINGS WITH NAMEPLATE DIAGRAMS.

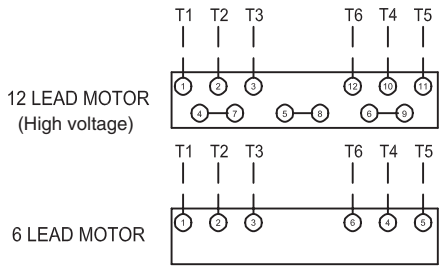

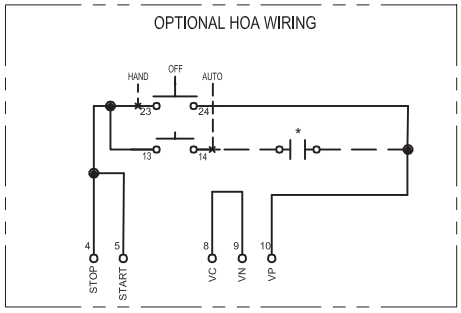

CONNECTION TORQUE: CONSULT SOFT STARTER MANUAL FOR WIRE TORQUE SPECIFICATIONS.

LEGEND	
CCT	CONTROL CIRCUIT TRANSFORMER
CHFU	CCT PRIMARY FUSE
CXFU	CCT SECONDARY FUSE
B	BYPASS CONTACTOR
PTC	THERMAL COUPLE
o 13	CONN POINT ON DEVICE WITH NUMBER
*	REMOTE DEVICE
∅	CONNECTION POINT AT TERMINAL BLOCK

PST NOTES:
1. PROG. INPUT In0 FACTORY SET FOR RESET FAULT/OL.
2. PROG. RELAY K4 FACTORY SET FOR RUN.
3. PROG. RELAY K5 FACTORY SET FOR AT SPEED.
4. PROG. RELAY K6 FACTORY SET FOR EVENT.
5. FUNCTION MOT 1 Ie MUST BE SET TO MOTOR FLA.

NOTES
1. ALL CONTROL WIRING TO BE 14 GA. COLOR OF CONTROL WIRE SHALL BE PER VOLTAGE ON CONTACTOR COILS:

RED-ALL AC VOLTAGES
WHITE MAY BE USED ON THE GROUNDED SIDE OF THE AC CIRCUIT IF SPECIFIED.

BLUE-ALL DC VOLTAGES

2. ALL DEVICES ARE SHOWN DE-ENERGIZED.
3. DO NOT USE SELECTOR SWITCHES WITH AUTO-RESET OVERLOAD RELAYS.

Circuit diagrams
PSTB370 – PSTB1050
In-Line

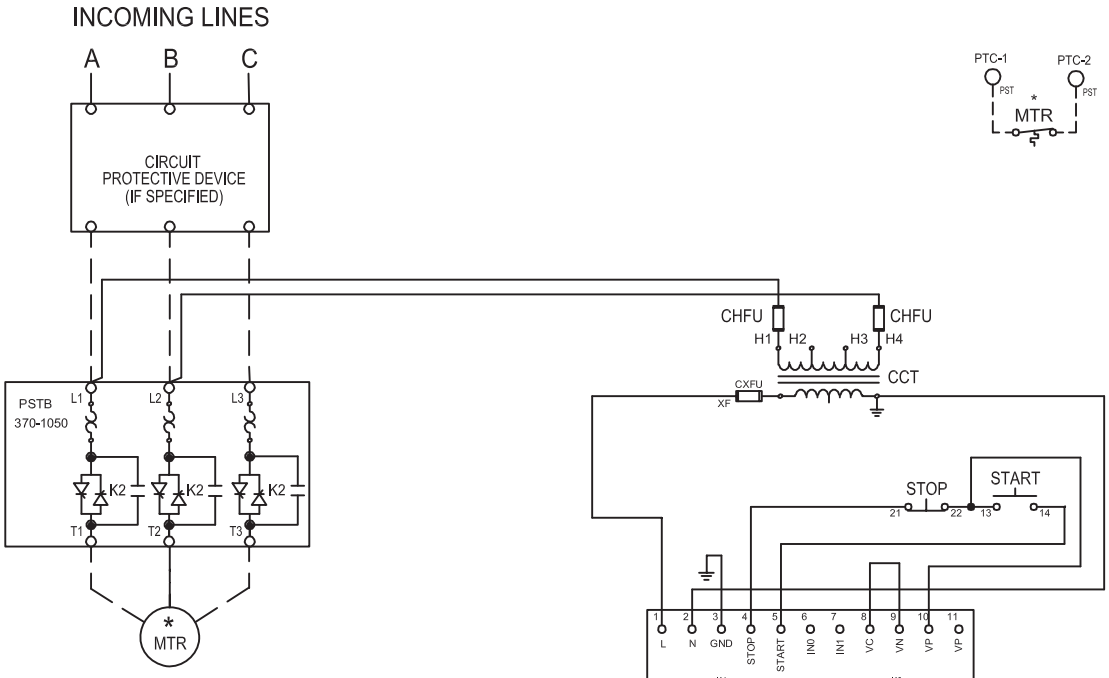

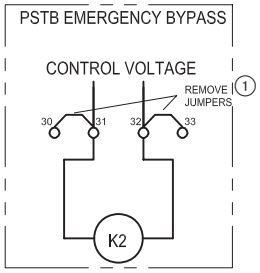

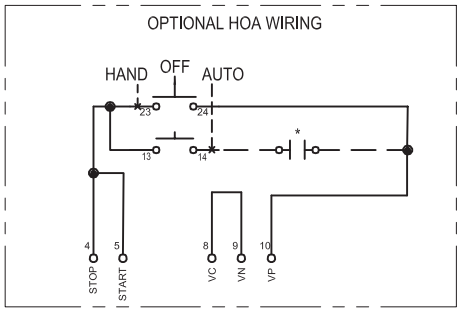

CONNECTION TORQUE: CONSULT SOFT STARTER MANUAL FOR WIRE TORQUE SPECIFICATIONS.

PST NOTES:
1. PROG. INPUT In0 FACTORY SET FOR RESET FAULT/OL.
2. PROG. RELAY K4 FACTORY SET FOR RUN.
3. PROG. RELAY K5 FACTORY SET FOR AT SPEED.
4. PROG. RELAY K6 FACTORY SET FOR EVENT.
5. FUNCTION MOT 1 Ie MUST BE SET TO MOTOR FLA.

LEGEND	
CCT	CONTROL CIRCUIT TRANSFORMER
CHFU	CCT PRIMARY FUSE
CXFU	CCT SECONDARY FUSE
B	BYPASS CONTACTOR
PTC	THERMAL COUPLE
o 13	CONN POINT ON DEVICE WITH NUMBER
*	REMOTE DEVICE
∅	CONNECTION POINT AT TERMINAL BLOCK

NOTES
1. ALL CONTROL WIRING TO BE 14 GA. COLOR OF CONTROL WIRE SHALL BE PER VOLTAGE ON CONTACTOR COILS:

   RED-ALL AC VOLTAGES
   WHITE MAY BE USED ON THE GROUNDED SIDE OF THE AC CIRCUIT IF SPECIFIED.

   BLUE-ALL DC VOLTAGES

2. ALL DEVICES ARE SHOWN DE-ENERGIZED.
3. DO NOT USE SELECTOR SWITCHES WITH AUTO-RESET OVERLOAD RELAYS.

① See page 6.35 for across the line rated (AC3) contactor ratings.

Circuit diagrams
PSTB370 – PSTB1050
Inside Delta

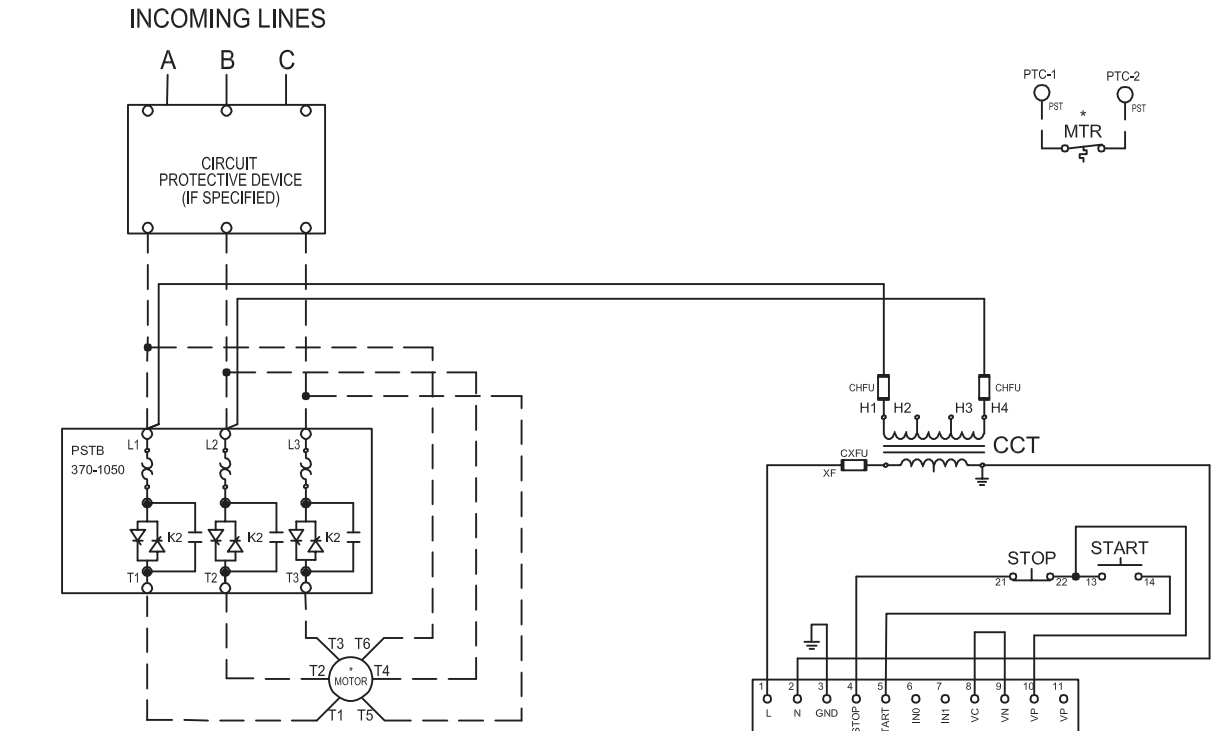

MOTOR MARKINGS ARE AS DEFINED BY NEMA MG1-2.62 FOR 12 LEAD WYE START, DELTA RUN MOTOR CONNECTIONS. ALWAYS CONFIRM CORRECT LEAD MARKINGS WITH NAMEPLATE DIAGRAMS.

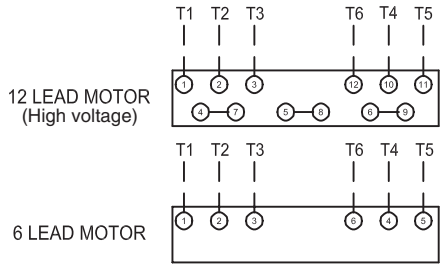

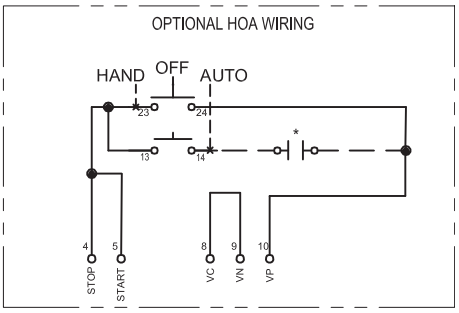

CONNECTION TORQUE: CONSULT SOFT STARTER MANUAL FOR WIRE TORQUE SPECIFICATIONS.

LEGEND	
CCT	CONTROL CIRCUIT TRANSFORMER
CHFU	CCT PRIMARY FUSE
CXFU	CCT SECONDARY FUSE
B	BYPASS CONTACTOR
PTC	THERMAL COUPLE
o 13	CONN POINT ON DEVICE WITH NUMBER
*	REMOTE DEVICE
Ø	CONNECTION POINT AT TERMINAL BLOCK

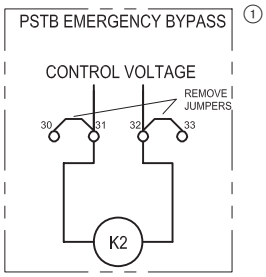

① See page 6.35 for across the line rated (AC3) contactor ratings.

PST NOTES:
1. PROG. INPUT In0 FACTORY SET FOR RESET FAULT/OL.
2. PROG. RELAY K4 FACTORY SET FOR RUN.
3. PROG. RELAY K5 FACTORY SET FOR AT SPEED.
4. PROG. RELAY K6 FACTORY SET FOR EVENT.
5. FUNCTION MOT 1 Ie MUST BE SET TO MOTOR FLA.

NOTES
1. ALL CONTROL WIRING TO BE 14 GA. COLOR OF CONTROL WIRE SHALL BE PER VOLTAGE ON CONTACTOR COILS:

   RED-ALL AC VOLTAGES
   WHITE MAY BE USED ON THE GROUNDED SIDE OF THE AC CIRCUIT IF SPECIFIED.

   BLUE-ALL DC VOLTAGES

2. ALL DEVICES ARE SHOWN DE-ENERGIZED.
3. DO NOT USE SELECTOR SWITCHES WITH AUTO-RESET OVERLOAD RELAYS.

Approximate dimensions
Open
PST30 – PST142

00.00 / 00.00 Inches [Millimeters]

PST30 – PST72

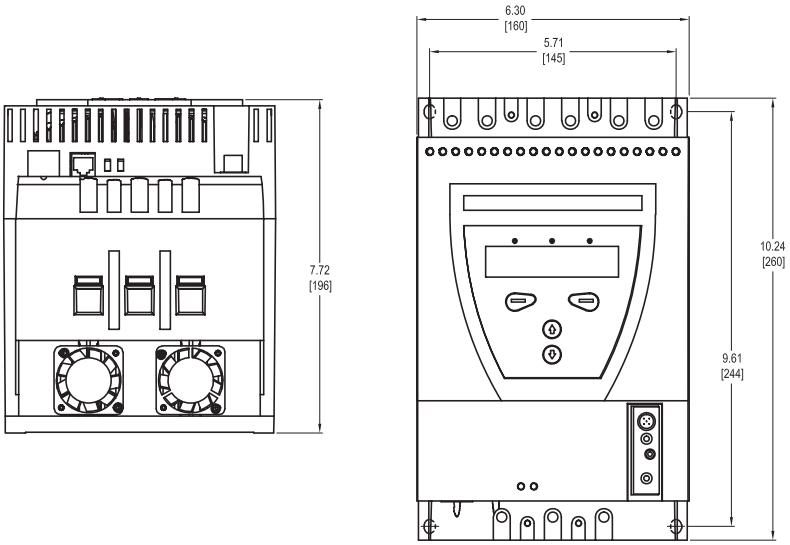

PST85 – PST142

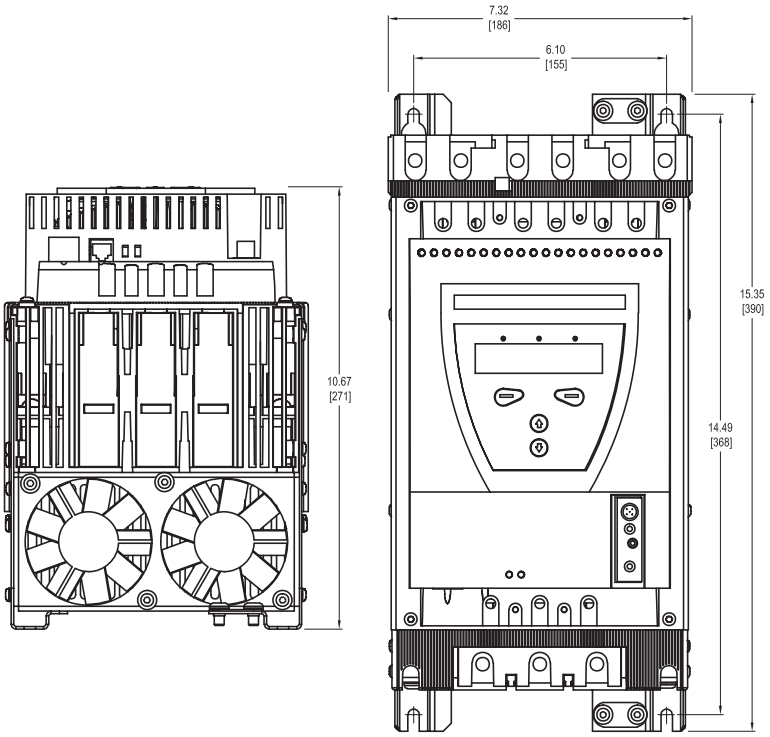

Approximate dimensions
Open
PST175 – PSTB470

00.00
00.00
Inches
[Millimeters]

PST175 – PST300

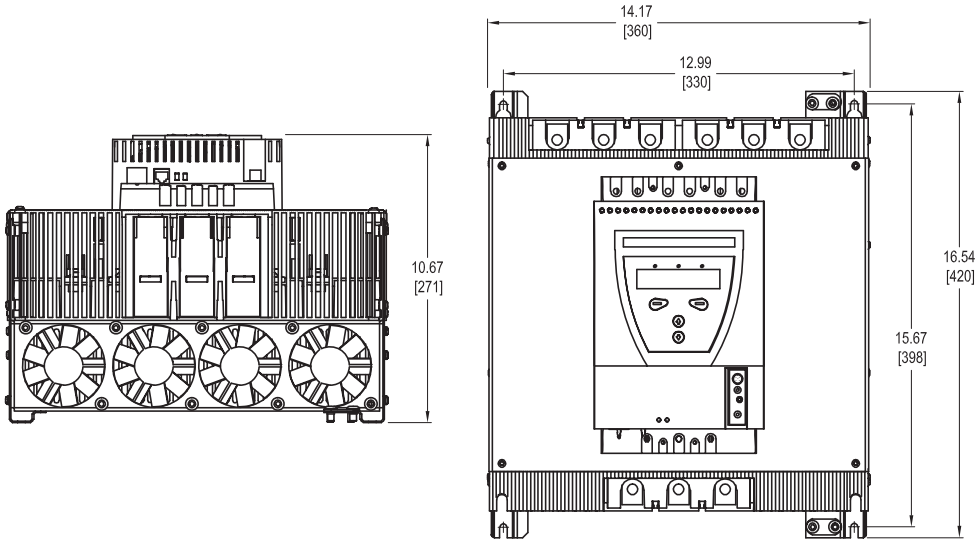

PSTB370 – PSTB470

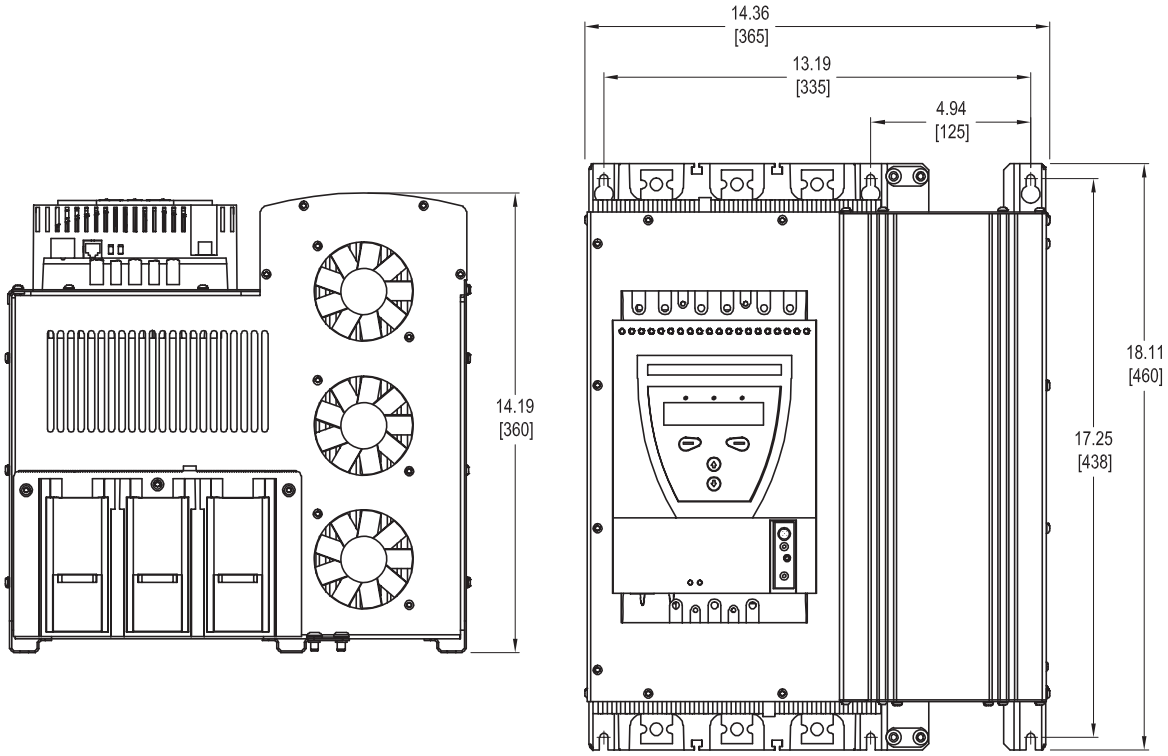

Approximate dimensions
Open
PSTB570 – PSTB1050

00.00 / 00.00 Inches [Millimeters]

PSTB570 – PSTB1050

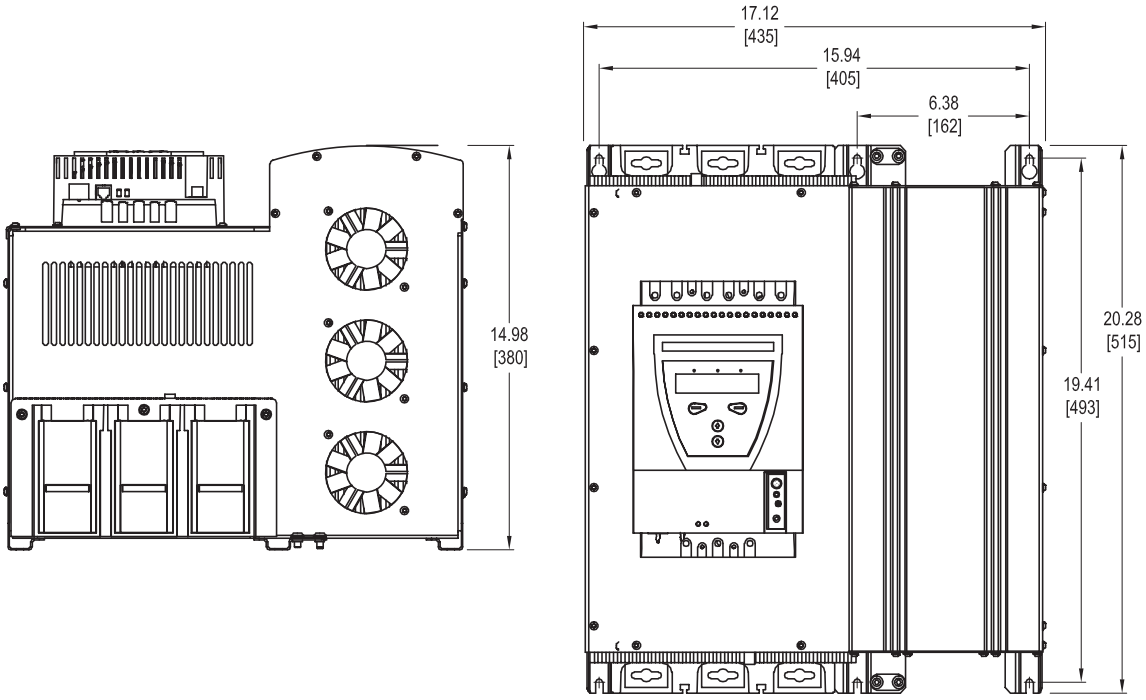

Approximate dimensions
Open
Wall mounting

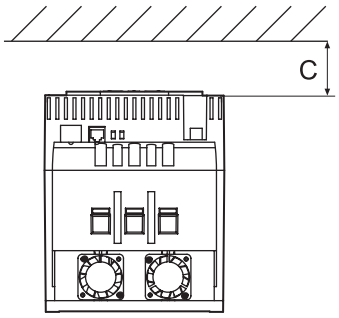

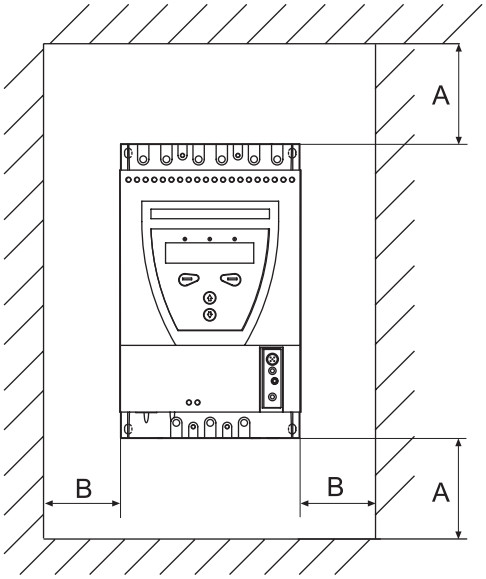

Softstarter type	A In. / mm	B In. / mm	C In. / mm
PST30 – 72	3.94 / 100	0.39 / 10	0.79 / 20
PST85 – 300	3.94 / 100	0.39 / 10	0.79 / 20
PST175 – 300	3.94 / 100	0.39 / 10	0.79 / 20
PSTB370 – 470	5.91 / 150	0.59 / 15	0.79 / 20
PSTB570 – 1050	5.91 / 150	0.59 / 15	0.79 / 20

Approximate dimensions
Enclosed
Horsepower to PST Softstarter type cross-reference

Maximum horsepower in-line

208V	240V	380V	480V	600V	PST Type
5 —	5 —	10 —	10 —	— 15	PST30
7.5 —	10 —	15 —	20 —	— 25	PST30
10 —	10 —	20 —	25 —	— 30	PST37
10 —	15 —	25 —	30 —	— 40	PST44
15 —	20 —	30 —	40 —	— 50	PST50
20 —	25 —	40 —	50 —	— 60	PST72
25 —	30 —	50 —	60 —	— 75	PST85
30 —	40 —	60 —	75 —	— 100	PST105
40 —	50 —	75 —	100 —	— 125	PST142
50 —	60 —	100 —	125 —	— 150	PST175
60 —	75 —	125 —	150 —	— 200	PST210
75 —	100 —	150 —	200 —	— 250	PST250
100 —	100 —	150 —	250 —	— 300	PST300
125 —	150 —	200 —	300 —	— 350	PSTB370
— —	— —	250 —	350 —	— 400	PSTB470
150 —	200 —	300 —	400 —	— 500	PSTB470
200 —	250 —	350 —	500 —	— 600	PSTB570
250 —	300 —	450 —	600 —	— 700	PSTB720
300 —	350 —	500 —	700 —	— 800	PSTB840
350 —	400 —	— —	800 —	— 900	PSTB1050
400 —	450 —	600 —	900 —	— 1000	PSTB1050

Maximum horsepower inside delta

208V	240V	380V	480V	600V	PST Type
7.5 —	10 —	15 —	20 —	— 25	PST30
10 —	10 —	20 —	25 —	— 30	PST30
10 —	15 —	25 —	30 —	— 40	PST30
15 —	20 —	30 —	40 —	— 50	PST37
20 —	25 —	40 —	50 —	— 60	PST44
25 —	30 —	50 —	60 —	— 75	PST50
30 —	40 —	60 —	75 —	— 100	PST72
40 —	50 —	75 —	100 —	— 125	PST85
50 —	60 —	100 —	125 —	— 150	PST105
60 —	75 —	125 —	150 —	— 200	PST142
75 —	100 —	150 —	200 —	— 250	PST175
100 —	100 —	150 —	250 —	— 300	PST210
125 —	150 —	200 —	300 —	— 350	PST250
— —	— —	250 —	350 —	— 400	PST300
150 —	200 —	300 —	400 —	— 500	PST300
200 —	250 —	350 —	500 —	— 600	PSTB370
250 —	300 —	450 —	600 —	— 700	PSTB470
300 —	350 —	500 —	700 —	— 800	PSTB570
350 —	400 —	— —	800 —	— 900	PSTB720
400 —	450 —	600 —	900 —	— 1000	PSTB720
400 —	500 —	800 —	1000 —	— 1200	PSTB720
500 —	600 —	900 —	1200 —	— 1500	PSTB840
600 —	700 —	1200 —	1500 —	— 1800	PSTB1050

Approximate dimensions
Enclosed
208V – 600V

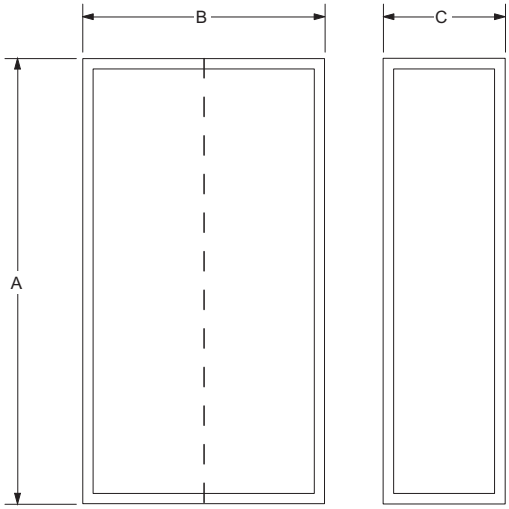

Enclosed, 208V – 600V

Combination	In-Line A	In-Line B	In-Line C	Inside Delta A	Inside Delta B	Inside Delta C
PST30 – PST72						
Softstarter only	20	20	12	20	20	12
Softstarter with bypass	20	20	12	20	20	12
Softstarter with fused disconnect	20	20	12	24	20	12
Softstarter with circuit breaker	20	20	12	24	20	12
PST85 – PST142						
Softstarter only	24	20	12	36	24	12
Softstarter with bypass	24	20	12	36	24	12
Softstarter with fused disconnect	30	30	12	42	36	12
Softstarter with circuit breaker	24	24	12	42	36	12
PST175 – PST300						
Softstarter only	30	30	12	42	30	12
Softstarter with bypass	30	30	12	42	30	12
Softstarter with fused disconnect	36	36	12	36	36	12
Softstarter with circuit breaker	36	36	12	36	36	12

Combination	In-Line A	In-Line B	In-Line C	Inside Delta A	Inside Delta B	Inside Delta C
PSTB370 – PSTB470						
Softstarter with bypass, internal	48	36	16	48	36	16
Softstarter with fused disconnect	48	36	16	87	36	24
Softstarter with circuit breaker	48	36	16	48	36	16
PSTB570 – PSTB720						
Softstarter with bypass, internal	48	36	16	48	36	16
Softstarter with fused disconnect	87	36	24	87	36	24
Softstarter with circuit breaker	48	36	16	48	36	16
PSTB840 – PSTB1050						
Softstarter with bypass, internal	87	36	24	87	36	24
Softstarter with fused disconnect	87	48	24	87	48	24
Softstarter with circuit breaker	87	48	24	87	48	24

Notes