BODINE ELECTRIC COMPANY	PART NO./REV: INFM0170 A
	DESCRIPTION: GEARMOTOR 33A5FEPM-5F
	SHEET: 1/1 · SCALE: 3:4 · C
	UNLESS OTHERWISE SPECIFIED: UNITS ARE IN INCHES [mm] TOLERANCES:.XX:±.01 .XXX:±.005 ANGLES: X°:±3° X.X°:±0.5°

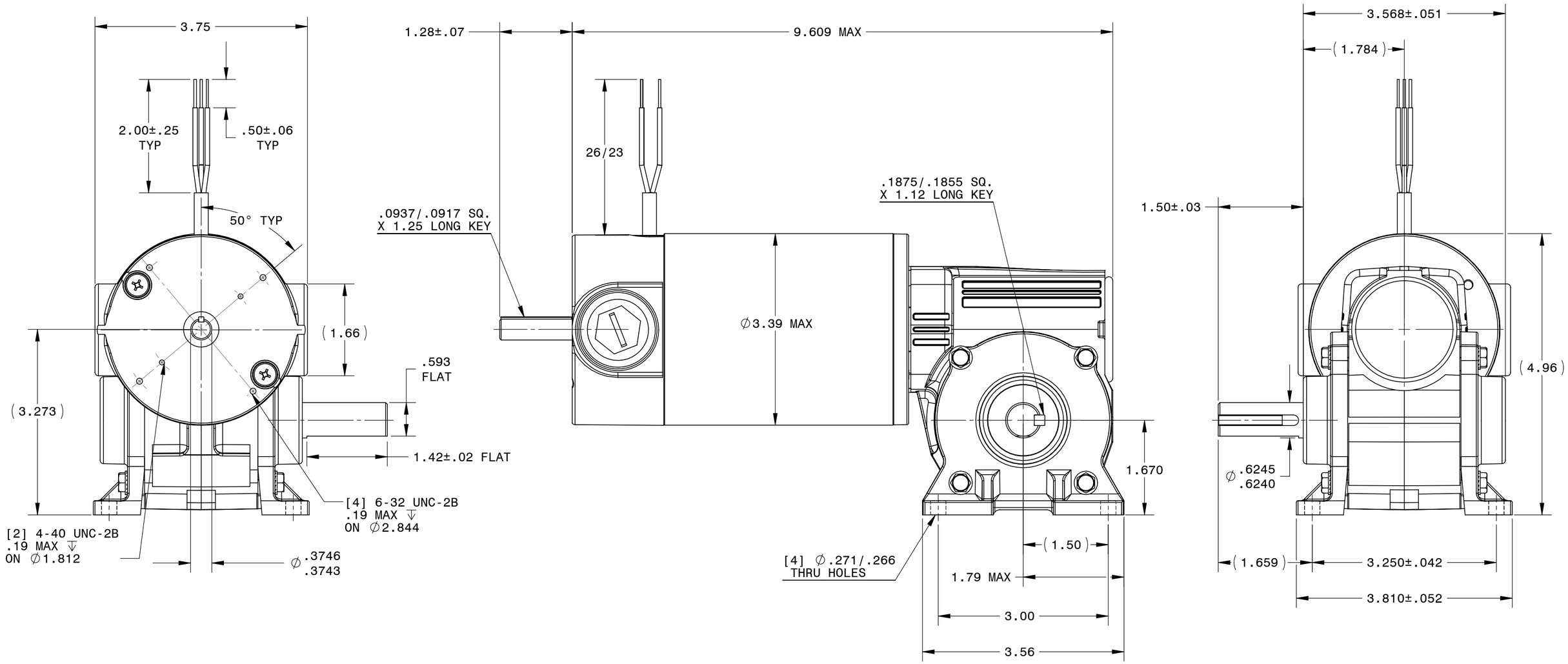

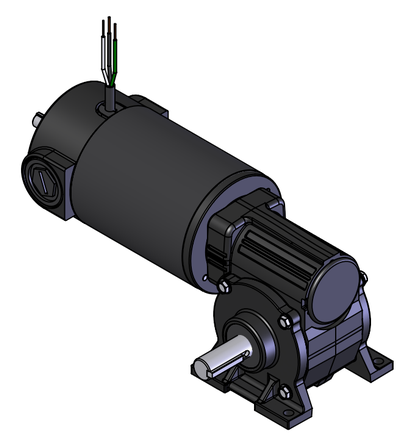

REPRESENTATIVE OF MODEL NUMBER(S):

6540 6541 6542 6544 6820 6822 6824 6825