SIEMENS

Data sheet US2:18CP92BCC81

Figure similar

Non-reversing motor starter Size 0 Three phase full voltage Amb compensate bimetal OLrelay Contactor amp rating 18Amp 220-240/440-480VAC 60HZ coil Combination type 25Amp circuit breaker Enclosure NEMA type 1 Indoor general purpose use Standard width enclosure

General technical data	
Weight [lb]	35 lb
Height x Width x Depth [in]	24 × 11 × 8 in
Protection against electrical shock	NA for enclosed products
Installation altitude [ft] at height above sea level maximum	6560 ft
Ambient temperature [°F] during storage	-22 ... +149 °F
Ambient temperature [°F] during operation	-4 ... +104 °F
Ambient temperature during storage	-30 ... +65 °C
Ambient temperature during operation	-20 ... +40 °C
Country of origin	USA

Horsepower ratings	
Yielded mechanical performance [hp] for three-phase AC motor	
• at 200/208 V rated value	3 hp
• at 220/230 V rated value	3 hp
• at 460/480 V rated value	5 hp

Subject to change without notice
© Copyright Siemens

• at 575/600 V rated value	5 hp

Contactor	
Number of NO contacts for main contacts	3
Operating voltage for main current circuit at AC at 60 Hz maximum	600 V
Operating current at AC at 600 V rated value	18 A
Mechanical service life (switching cycles) of the main contacts typical	10000000

Auxiliary contact	
Number of NC contacts at contactor for auxiliary contacts	0
Number of NO contacts at contactor for auxiliary contacts	1
Number of total auxiliary contacts maximum	8
Contact rating of auxiliary contacts of contactor according to UL	10A@600VAC (A600), 5A@600VDC (P600)

Coil	
Type of voltage of the control supply voltage	AC
Control supply voltage	
• at DC rated value	0 ... 0 V
• at AC at 60 Hz rated value	220 ... 480 V
• at AC at 50 Hz rated value	0 ... 0 V
Holding power at AC minimum	8.6 W
Apparent pick-up power of magnet coil at AC	218 V·A
Apparent holding power of magnet coil at AC	25 V·A
Operating range factor control supply voltage rated value of magnet coil	0.85 ... 1.1
Percental drop-out voltage of magnet coil related to the input voltage	50 %
Switch-on delay time	19 ... 29 ms
Off-delay time	10 ... 24 ms

Overload relay	
Product function	
• Overload protection	Yes
• Test function	Yes
• External reset	Yes
Reset function	Manual and automatic
Adjustment range of thermal overload trip unit	0.85 ... 1.15
Number of NC contacts of auxiliary contacts of overload relay	1
Number of NO contacts of auxiliary contacts of overload relay	0

Subject to change without notice
© Copyright Siemens

Operating current of auxiliary contacts of overload relay	
• at AC at 600 V	10 A
• at DC at 250 V	5 A
Contact rating of auxiliary contacts of overload relay according to UL	10A@600VAC (A600), 5A@250VDC (P300)

Enclosure	
Degree of protection NEMA rating of the enclosure	NEMA Type 1
Design of the housing	Indoor general purpose use

Motor Circuit Protector (magnetic trip only)	
Operating current of motor circuit breaker rated value	25 A
Adjustable pick-up value current of instantaneous short-circuit trip unit	55 ... 180 A

Mounting/wiring	
(mounting position)	Vertical
(mounting type)	Surface mounting and installation
Type of electrical connection for supply voltage line-side	Box lug
Type of connectable conductor cross-sections at line-side at AWG conductors single or multi-stranded	1x (14 AWG ... 10 AWG) or 1x (12 AWG ... 10 AWG)
Temperature of the conductor for supply maximum permissible	75 °C
Material of the conductor for supply	AL or CU
Type of electrical connection for load-side outgoing feeder	Screw-type terminals
Tightening torque [lbf·in] for load-side outgoing feeder	35 ... 50 lbf·in
Type of electrical connection of magnet coil	Screw-type terminals
Tightening torque [lbf·in] at magnet coil	5 ... 12 lbf·in
Type of connectable conductor cross-sections of magnet coil at AWG conductors single or multi-stranded	2x (16 ... 12 AWG)
Temperature of the conductor at magnet coil maximum permissible	75 °C
Material of the conductor at magnet coil	CU
Type of electrical connection for auxiliary contacts	Screw-type terminals
Tightening torque [lbf·in] at contactor for auxiliary contacts	10 ... 15 lbf·in
Type of connectable conductor cross-sections at contactor at AWG conductors for auxiliary contacts single or multi-stranded	1x (12 AWG), 2x (16 ... 14 AWG), 2x (18 ... 16 AWG)
Temperature of the conductor at contactor for auxiliary contacts maximum permissible	75 °C

Subject to change without notice
© Copyright Siemens

Material of the conductor at contactor for auxiliary contacts	CU
Type of electrical connection at overload relay for auxiliary contacts	Screw-type terminals
Tightening torque [lbf·in] at overload relay for auxiliary contacts	5 ... 12 lbf·in
Type of connectable conductor cross-sections at overload relay at AWG conductors for auxiliary contacts single or multi-stranded	2x (16 ... 12 AWG)
Temperature of the conductor at overload relay for auxiliary contacts maximum permissible	75 °C
Material of the conductor at overload relay for auxiliary contacts	CU

Short-circuit current rating

Design of the short-circuit trip	Motor circuit protector (magnetic trip only)
Maximum short-circuit current breaking capacity (Icu)	
• at 240 V	100 kA
• at 480 V	100 kA
• at 600 V	25 kA

Further information

Industrial Controls - Product Overview (Catalogs, Brochures,…)
www.usa.siemens.com/iccatalog

Industry Mall (Online ordering system)
https://mall.industry.siemens.com/mall/en/us/Catalog/product?mlfb=US2:18CP92BCC81

Service&Support (Manuals, Certificates, Characteristics, FAQs,...)
https://support.industry.siemens.com/cs/US/en/ps/US2:18CP92BCC81

Image database (product images, 2D dimension drawings, 3D models, device circuit diagrams, EPLAN macros, ...)
http://www.automation.siemens.com/bilddb/cax_de.aspx?mlfb=US2:18CP92BCC81&lang=en

Certificates/approvals
https://support.industry.siemens.com/cs/US/en/ps/US2:18CP92BCC81/certificate

Subject to change without notice
© Copyright Siemens

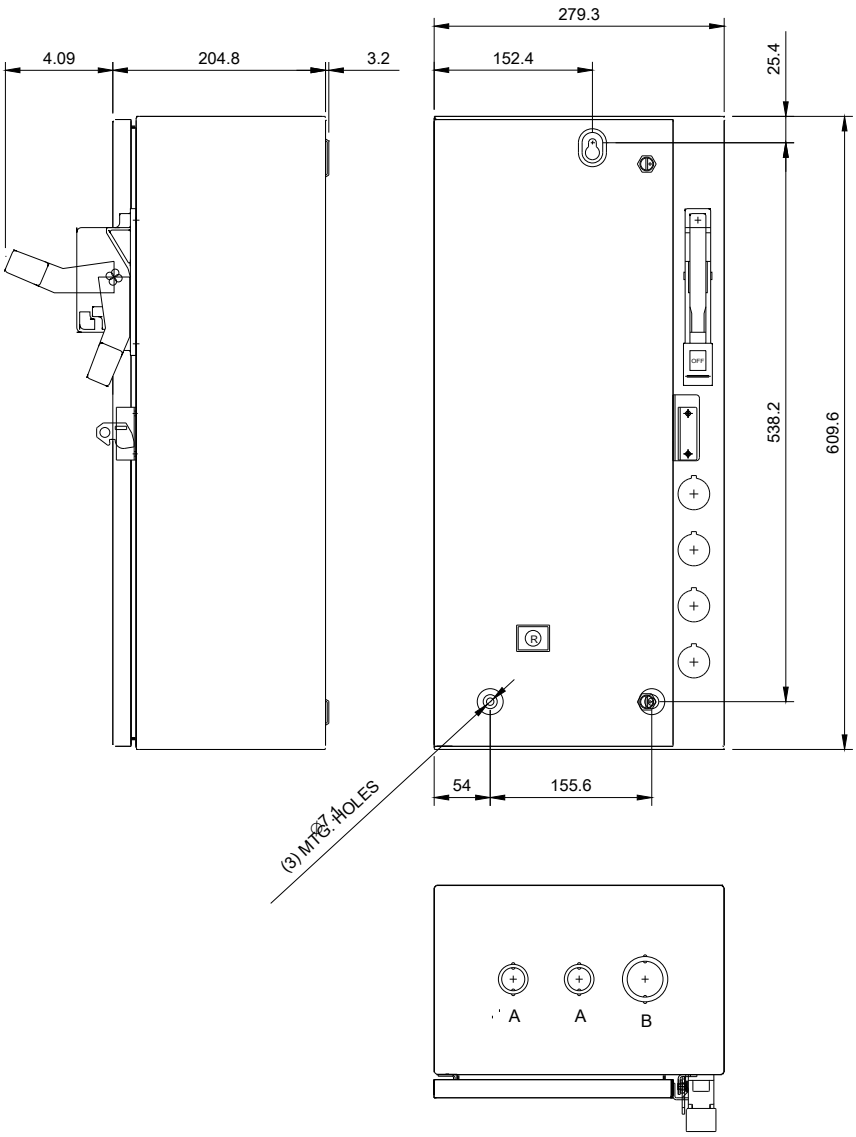

\LCONDUITS TYP. TOP & BOTTOM

LETTER	CONDUIT SIZE
A	%%C12.7 & %%C19 CONDUIT
B	∅25.4 & ∅31.8 CONDUIT

Subject to change without notice
© Copyright Siemens

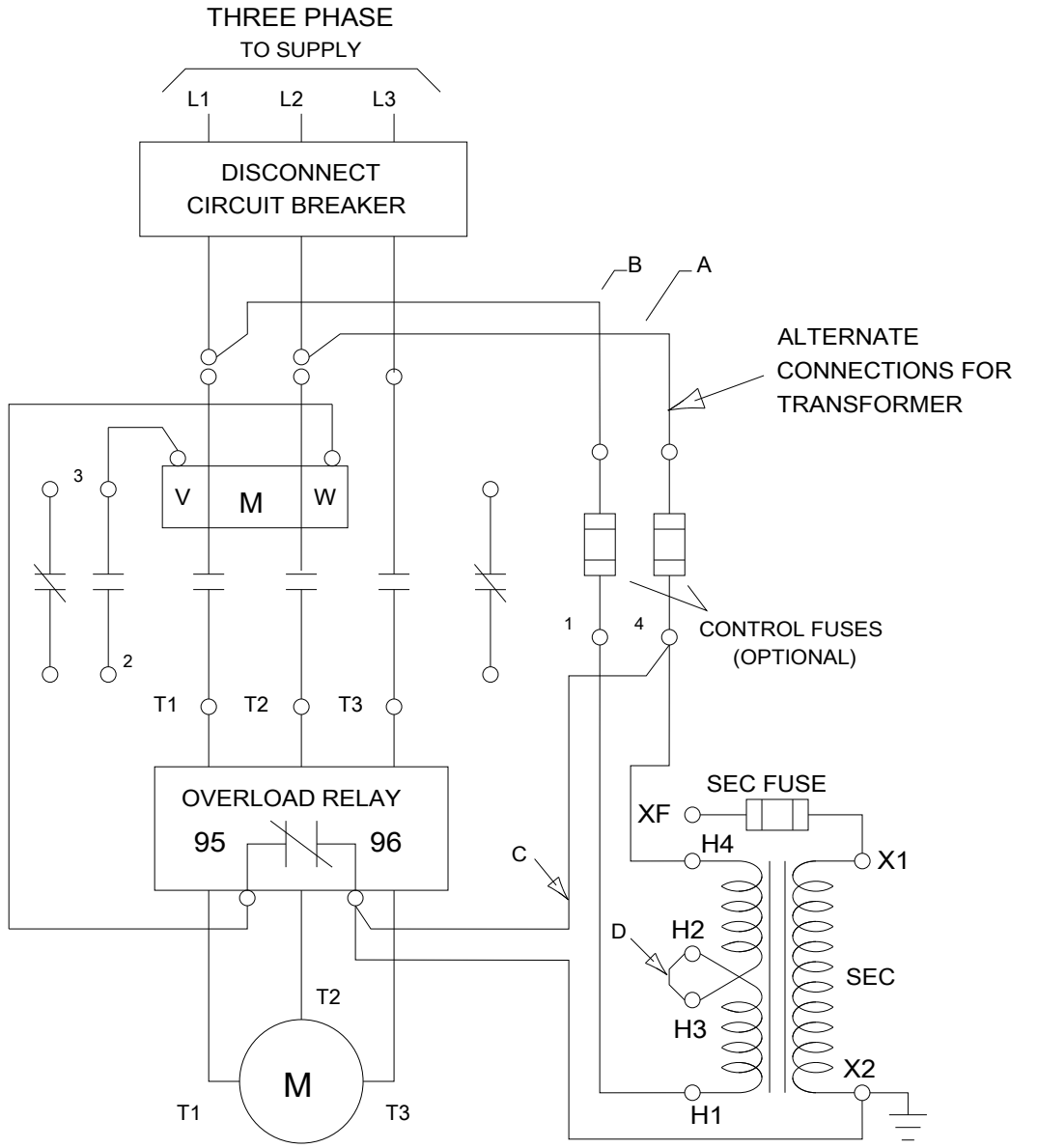

D68782001

last modified: 05/09/2019

Subject to change without notice
© Copyright Siemens