Style QH

C-Face Quilled–Hollow

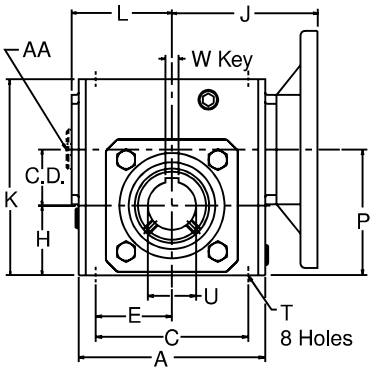

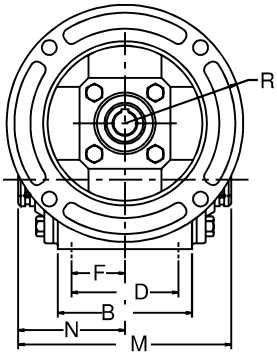

Style QHT

Torque Arm

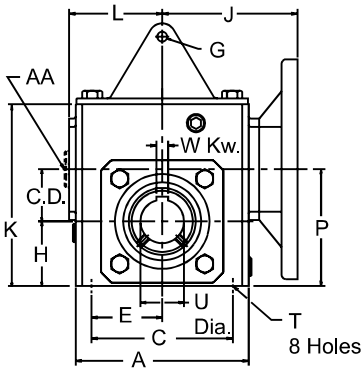

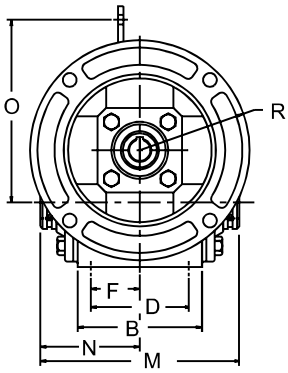

Assembly Drawing and Sample of Components

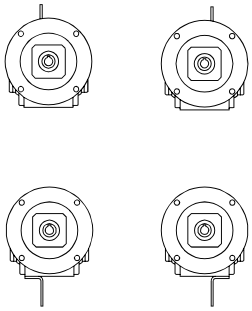

133Q56H10

133H-TAK

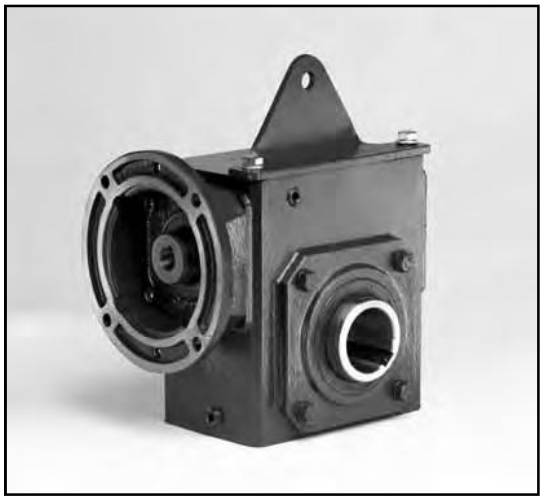

Dimensions (Inches) for Style "QH"

C.D.	Basic Unit ★	N.E.M.A. Frame	A	B	C	D	E	F	H	J	K	L	M	N	P	R
1.33	**133Q56H**	56C	4.00	2.88	3.25	2.00	1.63	1.00	1.72	3.94	4.66	2.12	5.31	2.66	3.05	3.25
1.54	**154Q56H**	56C	5.13	3.69	4.19	2.75	2.09	1.38	1.91	4.52	5.38	2.75	6.44	3.22	3.45	3.25
1.54	**154Q140H**	143/145TC	5.13	3.69	4.19	2.75	2.09	1.38	1.91	4.52	5.38	2.75	6.44	3.22	3.45	3.25
1.75	**175Q56H**	56C	4.81	3.38	4.19	2.75	2.09	1.38	2.06	4.38	5.75	2.75	5.70	2.85	3.81	3.25
1.75	**175Q140H**	143/145TC	4.81	3.38	4.19	2.75	2.09	1.38	2.06	4.38	5.75	2.75	5.70	2.85	3.81	3.25
2.06	**206Q56H**	56C	5.50	3.75	5.00	2.88	2.50	1.44	2.28	4.75	6.38	3.00	6.44	3.22	4.34	3.25
2.06	**206Q140H**	143/145TC	5.50	3.75	5.00	2.88	2.50	1.44	2.28	4.75	6.38	3.00	6.44	3.22	4.34	3.25
2.37	**237Q56H**	56C	6.13	4.06	5.00	2.88	2.50	1.44	2.50	5.06	6.94	3.56	6.31	3.16	4.88	3.25
2.37	**237Q140H**	143/145TC	6.13	4.06	5.00	2.88	2.50	1.44	2.50	5.06	6.94	3.56	6.31	3.16	4.88	3.25
2.62	**262Q56H**	56C	7.12	4.44	6.38	3.38	3.19	1.69	2.94	5.69	8.00	3.69	6.88	3.44	5.57	3.25
2.62	**262Q140H**	143/145TC	7.12	4.44	6.38	3.38	3.19	1.69	2.94	5.69	8.00	3.69	6.88	3.44	5.57	3.25
2.62	**262Q180H**	182/184TC	7.12	4.44	6.38	3.38	3.19	1.69	2.94	6.13	8.00	3.69	6.88	3.44	5.57	4.50
3.00	**300Q56H**	56C	8.50	5.50	7.00	4.00	3.50	2.00	3.25	5.67	8.88	4.50	8.38	4.19	6.25	3.25
3.00	**300Q140H**	143/145TC	8.50	5.50	7.00	4.00	3.50	2.00	3.25	5.67	8.88	4.50	8.38	4.19	6.25	3.25
3.00	**300Q180H**	182/184TC	8.50	5.50	7.00	4.00	3.50	2.00	3.25	6.45	8.88	4.50	8.38	4.19	6.25	4.50
3.25	**325Q56H**	56C	8.50	5.00	7.50	4.00	3.75	2.00	3.50	6.56	9.38	4.50	8.50	4.25	6.75	3.25
3.25	**325Q140H**	143/145TC	8.50	5.00	7.50	4.00	3.75	2.00	3.50	6.56	9.38	4.50	8.50	4.25	6.75	3.25
3.25	**325Q180H**	182/184TC	8.50	5.00	7.50	4.00	3.75	2.00	3.50	7.00	9.38	4.50	8.50	4.25	6.75	4.50
3.75	**375Q56H**	56C	9.50	6.38	8.50	4.75	4.25	2.38	3.88	6.01	10.44	4.93	9.63	4.81	7.63	3.38
3.75	**375Q140H**	143/145TC	9.50	6.38	8.50	4.75	4.25	2.38	3.88	6.01	10.44	4.93	9.63	4.81	7.63	3.38
3.75	**375Q180H**	182/184TC	9.50	6.38	8.50	4.75	4.25	2.38	3.88	7.29	10.44	4.93	9.63	4.81	7.63	4.50
3.75	**375Q210H**	213/215TC	9.50	6.38	8.50	4.75	4.25	2.38	3.88	7.29	10.44	4.93	9.63	4.81	7.63	4.50
4.50	**450Q140H**	143/145TC	10.88	7.38	9.56	5.81	4.78	2.91	4.50	6.69	11.94	6.42	11.13	5.56	9.00	3.38
4.50	**450Q180H**	182/184TC	10.88	7.38	9.56	5.81	4.78	2.91	4.50	7.97	11.94	6.42	11.31	5.66	9.00	4.50
4.50	**450Q210H**	213/215TC	10.88	7.38	9.56	5.81	4.78	2.91	4.50	7.97	11.94	6.42	11.31	5.66	9.00	4.50
5.16	**516Q180H**	182/184TC	12.50	7.38	11.00	5.81	5.50	2.91	5.31	8.78	13.75	7.42	11.31	5.66	10.47	4.50
5.16	**516Q210H**	213/215TC	12.50	7.38	11.00	5.81	5.50	2.91	5.31	8.78	13.75	7.42	11.31	5.66	10.47	4.50
6.00	**600Q180H**	182/184TC	14.50	8.13	12.75	6.38	6.38	3.19	6.50	9.68	16.50	8.25	12.63	6.31	12.50	4.50
6.00	**600Q210H**	213/215TC	14.50	8.13	12.75	6.38	6.38	3.19	6.50	9.68	16.50	8.25	12.63	6.31	12.50	4.50

C.D.	N.E.M.A. Frame	T		INPUT		OUTPUT BORE ✚		Stock Ratios marked "x"									Wt. Lbs.
		Size	Deep	Bore	Keyway	U +.0015 -.0000	W Keyway	5	10	15	20	25	30	40	50	60	
1.33	56C	5/16-18	.50	.625	3/16 x 3/32	.6250	3/16 x 3/32	x	x	x	x	x	x	x	x	x	17.0
1.54	56C	5/16-18	.50	.625	3/16 x 3/32	1.0000	1/4 x 1/8	x	x	x	x	x	x	x	x	x	22.0
1.54	143/145TC	5/16-18	.50	.875	3/16 x 3/32	1.0000	1/4 x 1/8	x	x	-	-	-	-	-	-	-	22.0
1.75	56C	5/16-18	.61	.625	3/16 x 3/32	1.0000	1/4 x 1/8	x	x	x	x	x	x	x	x	x	25.0
1.75	143/145TC	5/16-18	.61	.875	3/16 x 3/32	1.0000	1/4 x 1/8	x	x	x	-	-	-	-	-	-	25.0
2.06	56C	3/8-16	.61	.625	3/16 x 3/32	1.4375	3/8 x 1/8	x	x	x	x	x	x	x	x	x	33.0
2.06	143/145TC	3/8-16	.61	.875	3/16 x 3/32	1.4375	3/8 x 1/8	x	x	x	x	x	-	-	-	-	33.0
2.37	56C	3/8-16	.60	.625	3/16 x 3/32	1.4375	3/8 x 1/8	x	x	x	x	x	x	x	x	x	47.0
2.37	143/145TC	3/8-16	.60	.875	3/16 x 3/32	1.4375	3/8 x 1/8	x	x	x	x	x	x	x	-	-	47.0
2.62	56C	3/8-16	.58	.625	3/16 x 3/32	1.9375	1/2 x 1/8	-	x	x	x	x	x	x	x	x	57.0
2.62	143/145TC	3/8-16	.58	.875	3/16 x 3/32	1.9375	1/2 x 1/8	-	x	x	x	x	x	x	x	x	57.0
2.62	182/184TC	3/8-16	.58	1.125	1/4 x 1/8	1.9375	1/2 x 1/8	x	x	-	-	-	-	-	-	-	57.0
3.00	56C	7/16-14	.80	.625	3/16 x 3/32	2.1875	1/2 x 3/16	-	-	x	x	x	x	x	x	x	80.0
3.00	143/145TC	7/16-14	.80	.875	3/16 x 3/32	2.1875	1/2 x 3/16	-	x	x	x	x	x	x	x	x	80.0
3.00	182/184TC	7/16-14	.80	1.125	1/4 x 1/8	2.1875	1/2 x 3/16	-	x	x	x	x	x	x	x	x	80.0
3.25	56C	7/16-14	.80	.625	3/16 x 3/32	2.1875	1/2 x 3/16	-	x	x	x	x	x	x	x	x	83.0
3.25	143/145TC	7/16-14	.80	.875	3/16 x 3/32	2.1875	1/2 x 3/16		x	x	x	x	x	x	x	x	83.0
3.25	182/184TC	7/16-14	.80	1.125	1/4 x 1/8	2.1875	1/2 x 3/16	-	x	x	x	x	x	x	x	x	83.0
3.75	56C	1/2-13	1.00	.625	3/16 x 3/32	2.4375	5/8 x 3/16	-	-	-	-	-	-	x	x	x	116.0
3.75	143/145TC	1/2-13	1.00	.875	3/16 x 3/32	2.4375	5/8 x 3/16	-	x	x	x	x	x	x	x	x	116.0
3.75	182/184TC	1/2-13	1.00	1.125	1/4 x 1/8	2.4375	5/8 x 3/16	-	x	x	x	x	x	x	x	-	116.0
3.75	213/215TC	1/2-13	1.00	1.375	3/16 x 3/32	2.4375	5/8 x 3/16	-	x	x	-	-	-	-	-	-	116.0
4.50	143/145TC	5/8-11	1.00	.875	3/16 x 3/32	2.9375	3/4 x 1/4	-	-	-	-	-	-	x	x	x	150.0
4.50	182/184TC	5/8-11	1.00	1.125	1/4 x 1/8	2.9375	3/4 x 1/4	-	-	x	x	x	x	x	x	x	150.0
4.50	213/215TC	5/8-11	1.00	1.375	5/16 x 5/32	2.9375	3/4 x 1/4	-	x	x	x	x	-	-	-	-	150.0
5.16	182/184TC	5/8-11	1.00	1.125	1/4 x 1/8	3.4375	7/8 x 1/4	-	-	-	-	-	-	x	x	x	230.0
5.16	213/215TC	5/8-11	1.00	1.375	5/16 x 5/32	3.4375	7/8 x 1/4	-	x	x	x	x	x	-	-	-	230.0
6.00	182/184TC	5/8-11	1.00	1.375	5/16 x 5/32	3.9375	1 x 1/4	-	-	-	x	x	x	x	x	x	344.0
6.00	213/215TC	5/8-11	1.00	1.375	5/16 x 5/32	3.9375	1 x 1/4	-	-	-	-	x	x	x	x	x	344.0

Dimensions (Inches) for Style "QHT"

Components ◆		G	O	Wt. Lbs.
Ref. No.	Torque Arm Kit			
133QH	**133H-TAK**	.53	4.16	17.6
154QH	**154H-TAK**	.53	4.55	22.7
175QH	**175H-TAK**	.53	5.06	25.9
206QH	**206H-TAK**	.53	6.07	34.0
237QH	**237H-TAK**	.53	6.69	48.2
262QH	**262H-TAK**	.53	7.44	58.4
300QH	**300H-TAK**	.53	8.25	81.7
325QH	**325H-TAK**	.53	9.06	85.0
375QH	**375H-TAK**	.53	9.56	118.6
450QH	**450H-TAK**	.81	10.94	153.4
516QH	**516H-TAK**	.81	12.45	235.5
600QH	**600H-TAK**	.81	14.63	350.9

Fan Kit

Ref. No.	Fan Kit	AA		L	Wt. Lbs.
		Tap	Deep		
375QH	**375 FAN**	3/8-24	3/4	7.66	2.8
450QH	**450 FAN**	3/8-24	3/4	8.36	2.8
516QH	**516 FAN**	3/8-24	3/4	9.18	2.8
600QH	**600 FAN**	3/8-24	3/4	10.70	4.2

★ To complete Part No. add ratio symbol to size - for example 133Q56H10.
◆ Components needed to make assembled reducer must be ordered separately. If Fan Kit is required, see the table above.
✚ For adapting reducers to shafts smaller than output bore, use Bushing Kits, see the table on page 218. Consult factory for ratios not shown as standard.