CFW11

WEG's CFW11 uses state-of-the-art technology to control motors up to 1000HP. Aimed at increasing customers productivity, the CFW11 offers the following innovations:

Standard Features

- Same programming as all other WEG VFD's
- Plug and play philosophy (connect and use) enables quick and easy installation of accessories and options.
- USB for microcomputer connection for using SUPERDRIVE programming and monitoring software as well as updating inverter firmware.
- Human-Machine Interface (HMI) with backlit graphic display and soft-keys, greatly facilitates inverter programming and operation.
- DC link inductors (symetrically connected to positive and negative DC link terminals) enable compliance with IEC61000-3-12 standard requirements regarding harmonics, (no need for external line reactance.)
- Intelligent thermal management enables full protection of IGBTs, monitoring of heatsink and internal air temperature.
- Conformal coated circuit boards.
- 50°C Ambient
- Automatic control of the heatsink fan with speed sensor (additional protection) and easily detachable from the unit for cleaning and maintenance.
- Normal Duty and Heavy Duty ratings to adapt optimally to all kinds of loads.
- Protection with failure and alarm warnings.
- Motor overload protection in compliance with IEC 60947-4-2 | UL 508 C.
- Memory card built into the standard product allows user to create functions without the need to use an external PLC (soft-PLC via IEC61131-3 programming software)
- Guided start-up simplifies initial user programming.
- Real time clock with time and date stamped fault log.
- TRACE / SCOPE function to assist with the start-up and system diagnostics.
- SuperDrive G2 compatible

Applications

- Pumps
- Fans/Blowers
- Conveyors
- Compressors
- Agitators and Mixers
- Extruders
- Grizzly Feeders
- Centrifuges
- Cranes and Hoists
- Rollout Tables
- Presses
- Saws

Optional Features

- Safety stop in compliance with EN 954 - 1/category III**
- External control feed with 24 Vdc
- RFI filter in compliance with EN 61800-3 (internal)**
- DB Resistors and line/load reactors available upon request

***factory ordered*

Data is subject to change without notice.

CFW11 Catalog Number Sequence

CFW11	0105	T	4	O	N1	DB	Z

Rated Current

- 0003 = 3 Amps
- 0006 = 6 Amps
- 0010 = 10 Amps
- 0024 = 24 Amps
- 0070 = 70 Amps
- 0105 = 105 Amps
- 0142 = 142 Amps
- 0211 = 211 Amps
- 0312 = 312 Amps
- 0477 = 477 Amps
- 0720 = 720 Amps
- 1141 = 1141 Amps

Configuration

- S = Standard
- O = Options Added

Supply Voltage

- 2 = 200-240 Vac
- 4 = 380-480 Vac
- 5 = 500-600 Vac
- 6 = 600-690 Vac

Supply Phases

- S = Single Phase
- B = 1 or 3 Phase
- T = Three Phase

Options

- N1 = NEMA 1 *
- DB = Dynamic Brake
- NB = No Brake
- FA = RFI Filter
- NF = No RFI Filter
- W = External 24Vdc
- Y = Safe Stop (STO)
- Z = End of Number

** CFW11 Frames F and G are IP20 Chassis*

Table intended as reference only and not to create part numbers.

Variable Frequency Drives

CFW11

Drive Ratings

Normal Duty (ND) Cycle:

- 110% for 60 seconds every 10 minutes
- 150% for 3 seconds every 10 minutes

Heavy Duty (HD) Cycle:

- 150% for 60 seconds every 10 minutes
- 200% for 3 seconds every 10 minutes

Sizing the drive

The correct way to select a VFD is to match its output current with the motor rated current. However, the tables in this catalog also present the expected motor horsepower for each VFD model. Use the motor power ratings only as a guide. Motor rated currents may vary with speed and manufacturer. IEC motor powers are based on WEG 4-pole motors, NEMA motor powers are based on NEC table 430-150.

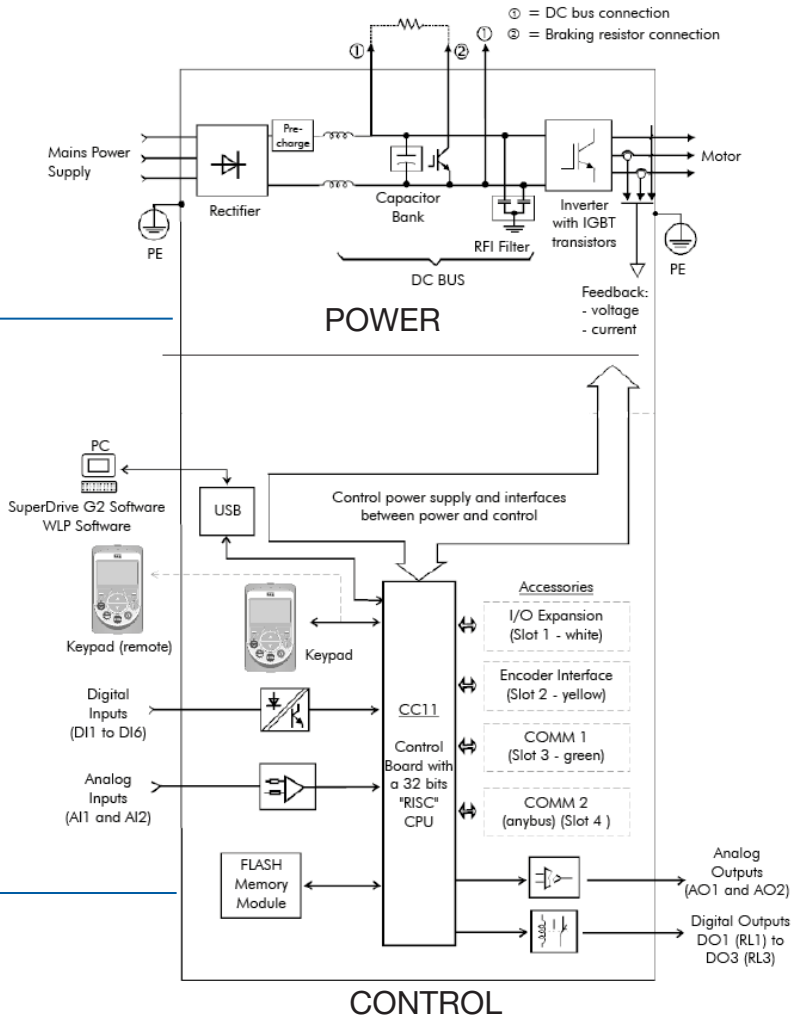

Notes:
1) Half controlled bridge rectiifer for sizes F and G
2) Standard for sizes A to D;
3) Standard RFI filter for sizes E, F and G;
Please refer to the user manual for more information.

Data is subject to change without notice.

NEMA 1 Enclosure

Motor Voltage	ND / VT [1]		HD / CT [1]		Catalog Number	Braking Transistor	Frame Size	Dimensions (in.) HxWxD	Approx. Weight (lbs.)	List Price	Multiplier
	Motor HP [2]	Drive Amps [3]	Motor HP [2]	Drive Amps [3]							
230 Vac	**Input Power Supply: Single or Three-Phase 200-240 Vac with Dynamic Braking Transistor**										
	1 1/2	6.0	1 1/2	5.0	CFW110006B2ON1Z	Yes	A	12.1 x 5.8 x 9.0	13.9	$1,644	V1
	2	7.0	2	7.0	CFW110007B2ON1Z	Yes	A	12.1 x 5.8 x 9.0	13.9	$1,716	V1
	Input Power Supply: Single-Phase 200-240 Vac with Dynamic Braking Transistor										
	3	10	3	10	CFW110010S2ON1Z	Yes	A	12.1 x 5.8 x 9.0	13.9	$1,812	V1
	Input Power Supply: Three-Phase 200-240 Vac with Dynamic Braking Transistor										
	2	7.0	1 1/2	5.5	CFW110007T2ON1Z	Yes	A	12.1 x 5.8 x 9.0	13.9	$1,620	V1
	3	10	2	8.0	CFW110010T2ON1Z	Yes	A	12.1 x 5.8 x 9.0	13.9	$1,692	V1
	5	13	3	11	CFW110013T2ON1Z	Yes	A	12.1 x 5.8 x 9.0	13.9	$1,728	V1
	5	16	5	13	CFW110016T2ON1Z	Yes	A	12.1 x 5.8 x 9.0	13.9	$1,850	V1
	7 1/2	24	7 1/2	20	CFW110024T2ON1Z	Yes	B	13.9 x 7.5 x 9.0	23	$2,424	V1
	10	28	10	24	CFW110028T2ON1Z	Yes	B	13.9 x 7.5 x 9.0	23	$2,641	V1
	10	34	10	28	CFW110033T2ON1Z	Yes	B	13.9 x 7.5 x 9.0	23	$3,190	V1
	15	45	15	36	CFW110045T2ON1Z	Yes	C	17.7 x 8.7 x 11.5	46	$3,641	V1
	20	54	20	45	CFW110054T2ON1Z	Yes	C	17.7 x 8.7 x 11.5	46	$4,400	V1
	25	70	20	56	CFW110070T2ON1Z	Yes	C	17.7 x 8.7 x 11.5	46	$6,600	V1
	30	86	25	70	CFW110086T2ON1Z	Yes	D	19.9 x 11.9 x 12.0	125	$7,222	V1
	40	105	30	86	CFW110105T2ON1Z	Yes	D	19.9 x 11.9 x 12.0	125	$9,000	V1
	50	142	40	115	CFW110142T2ON1DBZ	Yes	E [5]	26.6 x 13.2 x 14.1	144	$12,720	V1
	60	180	50	142	CFW110180T2ON1DBZ	Yes	E [5]	26.6 x 13.2 x 14.1	144	$17,555	V1
	75	211	60	180	CFW110211T2ON1DBZ	Yes	E [5]	26.6 x 13.2 x 14.1	144	$24,380	V1
	Input Power Supply: Three-Phase 200-240 Vac without Dynamic Braking Transistor										
	50	142	40	115	CFW110142T2ON1Z	No	E [5]	26.6 x 13.2 x 14.1	144	$11,649	V1
	60	180	50	142	CFW110180T2ON1Z	No	E [5]	26.6 x 13.2 x 14.1	144	$15,125	V1
	75	211	60	180	CFW110211T2ON1Z	No	E [5]	26.6 x 13.2 x 14.1	144	$21,560	V1

Notes:
1) CT = Constant Torque, 150% overload / 60 sec.; VT = Variable Torque (Quadratic Load), 110% overload / 60 sec.
2) "HP" rating based on "average FLA values". Use as a guide only.
3) Motor FLA may vary with speed and manufacturer. ALWAYS compare motor FLA to Nominal AMPS of drive.
4) All 575V drives are non-stocked items. Consult WEG for availability.
5) Maximum 45°C ambient temperature without derating
6) Maximum 40°C ambient temperature without derating
7) IP20 enclosure protection level
8) Frame size "H" does not have built-in DC-link Inductor. Input reactor(s) MUST be used.
For other technical data please refer to WEG product manual.

Variable Frequency Drives

CFW11

NEMA 1 Enclosure

Motor Voltage	ND / VT [1] Motor HP [2]	ND / VT [1] Drive Amps[3]	HD / CT [1] Motor HP [2]	HD / CT [1] Drive Amps[3]	Catalog Number	Braking Transistor	Frame Size	Dimensions (in.) HxWxD	Approx. Weight (lbs.)	List Price	Multiplier
460 Vac	**Input Power Supply: Three-Phase 380-480 Vac with Dynamic Braking Transistor**										
	2	3.6	2	3.6	CFW110003T4ON1Z	Yes	A [9]	12.1 x 5.8 x 9.0	22	$1,616	V1
	3	5.0	3	5.0	CFW110005T4ON1Z	Yes	A [9]	12.1 x 5.8 x 9.0	22	$1,650	
	5	7.0	3	5.5	CFW110007T4ON1Z	Yes	A [9]	12.1 x 5.8 x 9.0	22	$1,712	
	7 1/2	10	5	10	CFW110010T4ON1Z	Yes	A [9]	12.1 x 5.8 x 9.0	22	$1,969	
	10	13.5	7 1/2	11	CFW110013T4ON1Z	Yes	A [9]	12.1 x 5.8 x 9.0	22	$2,068	
	10	17	10	13.5	CFW110017T4ON1Z	Yes	B [9]	13.9 x 7.5 x 9.0	23	$2,530	
	15	24	10	19	CFW110024T4ON1Z	Yes	B [9]	13.9 x 7.5 x 9.0	23	$2,992	
	20	31	15	25	CFW110031T4ON1Z	Yes	B [9]	13.9 x 7.5 x 9.0	23	$3,873	
	25	38	20	33	CFW110038T4ON1Z	Yes	C	17.7 x 8.7 x 11.5	46	$4,300	
	30	45	25	38	CFW110045T4ON1Z	Yes	C	17.7 x 8.7 x 11.5	46	$5,400	
	40	58.5	30	47	CFW110058T4ON1Z	Yes	C	17.7 x 8.7 x 11.5	46	$6,633	
	50/60	70.5	40	61	CFW110070T4ON1Z	Yes	D	19.9 x 11.9 x 12.0	125	$7,500	
	60/75	88	50	73	CFW110088T4ON1Z	Yes	D	19.9 x 11.9 x 12.0	125	$8,900	
	75	105	75	88	CFW110105T4ON1DBZ	Yes	E [5]	26.6 x 13.2 x 14.1	144	$13,600	
	100/125	142	75	115	CFW110142T4ON1DBZ	Yes	E [5]	26.6 x 13.2 x 14.1	144	$15,900	
	150	180	100/125	142	CFW110180T4ON1DBZ	Yes	E [5]	26.6 x 13.2 x 14.1	144	$23,115	
	175	211	150	180	CFW110211T4ON1DBZ	Yes	E [5]	26.6 x 13.2 x 14.1	144	$27,020	
	Input Power Supply: Three-Phase 380-480 Vac without Dynamic Braking Transistor										
	75	105	75	88	CFW110105T4ON1Z	No	E [5]	26.6 x 13.2 x 14.1	144	$10,650	V1
	100/125	142	75	115	CFW110142T4ON1Z	No	E [5]	26.6 x 13.2 x 14.1	144	$12,500	
	150	180	100/125	142	CFW110180T4ON1Z	No	E [5]	26.6 x 13.2 x 14.1	144	$17,500	
	175	211	150	180	CFW110211T4ON1Z	No	E [5]	26.6 x 13.2 x 14.1	144	$21,000	
	200	242	150	211	CFW110242T4SZ	No	F [5,7,10]	48.6 x 16.9 x 14.2	309	$23,000	
	250	312	200	242	CFW110312T4SZ	No	F [5,7,10]	48.6 x 16.9 x 14.2	309	$29,366	
	300	370	250	312	CFW110370T4SZ	No	F [5,7,10]	48.6 x 16.9 x 14.2	309	$31,314	
	400	477	300	370	CFW110477T4SZ	No	F [5,7,10]	48.6 x 16.9 x 14.2	309	$41,027	
	450	515	400	477	CFW110515T4SZ	No	G [5,7,10]	50 x 21.1 x 16.8	474	$43,970	
	500	601	450	515	CFW110601T4SZ	No	G [5,7,10]	50 x 21.1 x 16.8	474	$50,088	
	600	720	500	560	CFW110720T4SZ	No	G [6,7,10]	50 x 21.1 x 16.8	474	$59,330	
	700	795	550	637	CFW110795T4OYZ-LR	No	H [6,7,8,11]	55.7 x 27.1 x 16.6	470	$66,157	
	Qty. (2) ea. IP00 AC Line Reactors are included; supplied loose with the drive module:							12.3 x 15.5 x 13.5	125 x 2		
	750	877	600	715	CFW110877T4OYZ-LR	No	H [6,7,8,11]	55.7 x 27.1 x 16.6	470	$74,135	
	Qty. (2) ea. IP00 AC Line Reactors are included; supplied loose with the drive module:							12.3 x 15.5 x 13.5	125 x 2		
	950	1062	750	855	CFW111062T4OYZ-LR	No	H [6,7,8,11]	55.7 x 27.1 x 16.6	486	$92,842	
	Qty. (2) ea. IP00 AC Line Reactors are included; supplied loose with the drive module:							12.61 x 15.25 x 16.5	190 x 2		
	1000	1141	850	943	CFW111141T4OYZ-LR	No	H [6,7,8,11]	55.7 x 27.1 x 16.6	486	$105,623	
	Qty. (2) ea. IP00 AC Line Reactors are included; supplied loose with the drive module:							12.61 x 15.25 x 16.5	190 x 2		

Notes:
1) CT = Constant Torque, 150% overload / 60 sec.; VT = Variable Torque (Quadratic Load), 110% overload / 60 sec.
2) "HP" rating based on "average FLA values". Use as a guide only.
3) Motor FLA may vary with speed and manufacturer. ALWAYS compare motor FLA to Nominal AMPS of drive.
4) All 575V drives are non-stocked items. Consult WEG for availability.
5) Maximum 45°C ambient temperature without derating
6) Maximum 40°C ambient temperature without derating
For other technical data please refer to WEG product manual.
7) IP20 enclosure protection level
8) Frame size "H" does not have built-in DC-link Inductor. Input reactor(s) MUST be used.
9) 6% impedance DC reactor
10) 3% impedance DC reactor
11) 3% impedance AC Line reactor

Data is subject to change without notice.

NEMA 1 Enclosure

Motor Voltage	ND / VT [1] Motor HP [2]	ND / VT [1] Drive Amps [3]	HD / CT [1] Motor HP [2]	HD / CT [1] Drive Amps [3]	Catalog Number	Braking Transistor	Frame Size	Dimensions (in.) HxWxD	Approx. Weight (lbs.)	List Price	Multiplier
575 Vac [4]	**Input Power Supply: Three-Phase 500-600 Vac with Dynamic Braking Transistor**										
	2	2.9	2	2.7	CFW110002T5ON1NFZ	Yes	B	13.9 x 7.5 x 9.0	24	$2,393	V1
	3	4.4	3	3.8	CFW110004T5ON1NFZ	Yes	B	13.9 x 7.5 x 9.0	24	$2,360	
	7 1/2	7.0	5	6.4	CFW110007T5ON1NFZ	Yes	B	13.9 x 7.5 x 9.0	24	$2,516	
	10	10	7 1/2	9.0	CFW110010T5ON1NFZ	Yes	B	13.9 x 7.5 x 9.0	24	$2,850	
	10	12	10	10	CFW110012T5ON1NFZ	Yes	B	13.9 x 7.5 x 9.0	24	$2,998	
	15	17	15	17	CFW110017T5ON1NFZ	Yes	B	13.9 x 7.5 x 9.0	24	$3,145	
	20	22	20	19	CFW110022T5ON1NFZ	Yes	C	17.7 x 8.7 x 11.5	44.6	$4,748	
	25	27	20	22	CFW110027T5ON1NFZ	Yes	C	17.7 x 8.7 x 11.5	44.6	$5,023	
	30	32	25	27	CFW110032T5ON1NFZ	Yes	C	17.7 x 8.7 x 11.5	44.6	$5,803	
	40	44	30	36	CFW110044T5ON1NFZ	Yes	C	17.7 x 8.7 x 11.5	44.6	$7,175	
	50	53	40	44	CFW110053T6ON1YZ	Yes	E [5, 8]	26.6 x 13.2 x 14.1	143	$12,166	
	60	63	50	53	CFW110063T6ON1YZ	Yes	E [5, 8]	26.6 x 13.2 x 14.1	143	$12,932	
	75	80	75	66	CFW110080T6ON1YZ	Yes	E [5, 8]	26.6 x 13.2 x 14.1	143	$13,979	
	100	107	100	90	CFW110107T6ON1YZ	Yes	E [5, 8]	26.6 x 13.2 x 14.1	143	$23,951	
	125	125	100	107	CFW110125T6ON1YZ	Yes	E [5, 8]	26.6 x 13.2 x 14.1	143	$29,042	
	150	150	125	122	CFW110150T6ON1YZ	Yes	E [5, 8]	26.6 x 13.2 x 14.1	143	$33,040	
	Input Power Supply: Three-Phase 500-600 Vac without Dynamic Braking Transistor										
	50	53	40	44	CFW110053T6ON1NBYZ	No	E [5, 8]	26.6 x 13.2 x 14.1	143	$9,887	V1
	60	63	50	53	CFW110063T6ON1NBYZ	No	E [5, 8]	26.6 x 13.2 x 14.1	143	$10,510	
	75	80	75	66	CFW110080T6ON1NBYZ	No	E [5, 8]	26.6 x 13.2 x 14.1	143	$11,358	
	100	107	100	90	CFW110107T6ON1NBYZ	No	E [5, 8]	26.6 x 13.2 x 14.1	143	$19,458	
	125	125	100	107	CFW110125T6ON1NBYZ	No	E [5, 8]	26.6 x 13.2 x 14.1	143	$23,589	
	150	150	125	122	CFW110150T6ON1NBYZ	No	E [5, 8]	26.6 x 13.2 x 14.1	143	$32,080	
	150	170	150	150	CFW110170T6OYZ	No	F [5, 7, 8]	48.6 x 16.9 x 14.2	371	$33,083	
	200	216	150	180	CFW110216T6OYZ	No	F [5, 7, 8]	48.6 x 16.9 x 14.2	371	$40,206	
	300	289	250	240	CFW110289T6OYZ	No	F [5, 7, 8]	48.6 x 16.9 x 14.2	371	$48,913	
	350	315	300	289	CFW110315T6OYZ	No	G [5, 7, 8]	50 x 21.1 x 16.8	569	$54,936	
	400	365	350	315	CFW110365T6OYZ	No	G [5, 7, 8]	50 x 21.1 x 16.8	569	$71,061	
	450	435	350	357	CFW110435T6OYZ	No	G [5, 7, 8]	50 x 21.1 x 16.8	569	$76,125	
	650	584	550	504	CFW110584T6OYZ-LR	No	H [6, 7, 8, 9]	55.7 x 27.1 x 16.6	441	$78,880	
	Qty. (1) ea. IP00 AC Line Reactors are included; supplied loose with the drive module:							12.3 x 15.5 x 13.5	195 x 1		
	700	625	600	540	CFW110625T6OYZ-LR	No	H [6, 7, 8, 9]	55.7 x 27.1 x 16.6	441	$85,780	
	Qty. (1) ea. IP00 AC Line Reactors are included; supplied loose with the drive module:							12.3 x 15.5 x 13.5	195 x 1		
	850	758	650	614	CFW110758T6OYZ-LR	No	H [6, 7, 8, 9]	55.7 x 27.1 x 16.6	470	$102,734	
	Qty. (2) ea. IP00 AC Line Reactors are included; supplied loose with the drive module:							12.3 x 15.5 x 13.5	175 x 2		
	900	804	750	682	CFW110804T6OYZ-LR	No	H [6, 7, 8, 9]	55.7 x 27.1 x 16.6	470	$114,957	
	Qty. (2) ea. IP00 AC Line Reactors are included; supplied loose with the drive module:							12.3 x 15.5 x 13.5	175 x 2		

Notes:
1) CT = Constant Torque, 150% overload / 60 sec.; VT = Variable Torque (Quadratic Load), 110% overload / 60 sec.
2) "HP" rating based on "average FLA values". Use as a guide only.
3) Motor FLA may vary with speed and manufacturer. ALWAYS compare motor FLA to Nominal AMPS of drive.
4) All 575V drives are non-stocked items. Consult WEG for availability.
5) Maximum 45°C ambient temperature without derating
6) Maximum 40°C ambient temperature without derating
7) IP20 enclosure protection level
8) Includes STO Safety Stop per EN 954-1 / ISO 13849-1, category 3
9) Frame size "H" does not have built-in DC-link Inductor. Input reactor(s) MUST be used.
For other technical data please refer to WEG product manual.

Variable Frequency Drives

CFW11

Options and Accessories

Type	Catalog Number	Description	Slot	List Price	Multiplier
I/O Expansion Module	IOA-01	IOA Module for CFW11: 1 analog input (AI4 - 14 bits, voltage or current); 2 analog outputs (AO3 and AO4 -14 bits, voltage or current); 2 digital inputs; 2 digital outputs (open-collector). All analog inputs and outputs are galvanically isolated.	1	$1,100	V1
	IOB-01	IOB Module for CFW11: 2 analog inputs (AI3 and AI4 - 12 bits, voltage or current); 2 analog outputs (AO1 and AO2 - 11 bits, voltage or current); 2 digital inputs; 2 digital outputs (open-collector) All analog inputs and outputs are galvanically isolated.	1	$600	V1
	IOC-01	Module for SoftPLC : 8 x Isolated Digital Inputs; 8 x open collector digital outputs	4	$447	V1
	IOC-02	Module for SoftPLC : 8 x Isolated Digital Inputs; 4 x Relay output (240V/1A)	1	$411	V1
	IOE-01	PTC Temperature Sensor Input Card; 5 - Channels	1	$668	V1
	IOE-02	PT100 Temperature Sensor Input Card; 5 - Channels	1	$1,741	V1
	IOE-03	KTY84 Temperature Sensor Input Card; 5 - Channels	1	$863	V1
Encoder Module	ENC-01	Incremental encoder module, 5 to 12 VDC at 100 kHZ, with encoder signal repeater	2	$500	V1
	ENC-02	Incremental encoder module, 5 to 12 VDC at 100 kHZ, without encoder signal repeater	2	$430	V1
Communication	RS485-01	RS-485 serial communication module (Modbus-RTU)	3	$240	V1
	RS232-01	RS-232C serial communication module (Modbus-RTU)	3	$180	V1
	RS232-02	RS232C serial commuication module with DIP-switches for microcontroller's flash memory programming	3	$180	V1
	CAN/RS485-01	CAN and RS-485 communication module (CANopen / Modbus / DeviceNet)	3	$480	V1
	CAN-01	CAN interface module (CANopen/DeviceNet) (CFW11 & CFW700)	3	$410	V1
	ETHERCAT-01	EtherCAT Communication Module	3	$1,320	V1
	PROFIBUS DP-01	Profibus DP-V1 interface module (CFW11 & CFW700)	3	$520	V1
	PROFDP-05	Profibus DP interface module	4	$935	V1
	DEVICENET-05	DeviceNet interface module	4	$935	V1
	ETHERNET/IP-05	Ethernet/IP interface module	4	$935	V1
	ETHERNETIP-2P-05	EtherNet/IP Communication Module, 2-ports	4	$1,067	V1
	RS232-05	RS-232 serial communication module (Modbus-RTU)	4	$228	V1
	RS485-05	RS-485 serial communication module (Modbus-RTU)	4	$275	V1
	MODBUSTCP-05	Modbus - TCP/IP interface module	4	$1,381	V1
	PROFINET IO-05	Profinet interface module	4	$1,594	V1
PLC	PLC11-01	PLC functions with ladder programming, electronic gear box, etc.; 9 digital inputs; 3 dry-contact digital outputs; 3 open-collector digital outputs; 1 analog input (14 bits); 2 analog outputs (14 bits); 2 encoder interfaces; RS-485 Mobus-RTU interface; CAN interface (CANopen, CANopen master/slave)	1, 2, 3	$1,876	V1
PLC	PLC11-02	PLC functions with ladder programming, electronic gear box, etc.; 4 digital inputs; 1 dry-contact digital output; 3 open-collector digital outputs; 2 encoder interfaces; RS-485 Modbus-RTU interface; CAN interface (CANopen, CANopen master/slave)	1,2,3	$1,221	V1
Flash Memory	MMF-01	Flash Memory Module for CFW11; Blue Cover; For main circuit board versions CC11C and older	5	$71	V1
	MMF-03	Flash Memory Module for CFW11; Yellow Cover; For main circuit board versions CC11D and newer	5	$71	V1

continued on next page

Data is subject to change without notice.

Options and Accessories

Type	CATALOG NUMBER	Description	List Price	Multiplier
Keypad and Accessories	HMI-01	CFW11 Standard Keypad	$320	V1
	RHMIF-01	CFW11 Remote Keypad Frame Kit	$69	V1
	HMID-01	Blank Keypad Cover for Keypad Slot (CFW11 & CFW700)	$54	V1
Remote Keypad Cable	IHM-CAB-RS-1M	3.3 ft (1 meter) Remote Keypad Cable (CFW11 & CFW700)	$54	V1
	IHM-CAB-RS-2M	6.6 ft (2 meter) Remote Keypad Cable (CFW11 & CFW700)	$60	V1
	IHM-CAB-RS-3M	9.9 ft (3 meter) Remote Keypad Cable (CFW11 & CFW700)	$66	V1
	IHM-CAB-RS-5M	16 ft (5 meter) Remote Keypad Cable (CFW11 & CFW700)	$75	V1
	IHM-CAB-RS-7.5M	25 ft (7.5 meter) Remote Keypad Cable (CFW11 & CFW700)	$90	V1
	IHM-CAB-RS-10M	33 ft (10 meter) Remote Keypad Cable (CFW11 & CFW700)	$102	V1
Remote Oper. Station	CSW-SP3PBS	Remote Operator Station-includes 22mm Start PB, Stop PB, 1-NC and 1-NO contact block, 5k-ohm Potentiometer and legends (replaces CFW-REM)	$460	Z5
	CSW30-SP3PBS	Remote Operator Station-includes 30mm Start PB, Stop PB, 1-NC and 1-NO contact block, 5k-ohm Potentiometer and legends (replaces CFW-REM)	$535	Z5
Conduit Kit	KN1A-01	Conduit Kit for frame size A with power cables shielding	$69	V1
	KN1B-01	Conduit Kit for frame size B with power cables shielding	$82	V1
	KN1C-01	Conduit Kit for frame size C with power cables shielding	$94	V1
	KIP21D-01	IP21 Top Cover Kit for Frame size D (CFW11 & CFW700)	$100	V1
	KN1E-01	Top cover kit for frame size E (105 and 142A)	$78	V1
	KN1E-02	Top cover kit plus Conduit kit for frame size E (180 and 211A)	$213	V1
	KN1F-01	NEMA 1 Conduit Kit for frame size F	$390	V1
	KN1G-01	NEMA 1 Conduit Kit for frame size G	$445	V1
Cable Shield Kit	PCSA-01	Power Cables Shielding Kit for frame size A (CFW11 & CFW700)	$48	V1
	PCSB-01	Power Cables Shielding Kit for frame size B (CFW11 & CFW700)	$51	V1
	PCSC-01	Power Cables Shielding Kit for frame size C (CFW11 & CFW700)	$54	V1
	PCSD-01	Power Cables Shielding Kit for frame size D (CFW11 & CFW700)	$56	V1
	PCSE-01	Power Cables Shielding Kit for frame size E (CFW11 & CFW700)	$76	V1
Dynamic Brake	DBW03-CFW11 F & G	External Dynamic Braking Module (frame F & G)	$6,822	V1

Variable Frequency Drives

CFW11

Technical Data

Power Supply	Voltage	Single Phase or Three Phase	200-240V (+10%, -15%)
		Three phase	380-480V (+10%, -15%)
	Frequency	50 / 60Hz +/- 2Hz	
	Displacement Power Factor (Cos)	Greater than 0.94	
Enclosure	Degree of Protection	NEMA 1	
Control	Control Modes	Volts per Hertz (Scalar)	Voltage Vector (VVW)
		Sensorless Vector	Vector with encoder
	Power Output	Sinusoidal PWM (Space Vector Modulation)	
		IGBT Transistors	
	Switching Frequency	1.25, 2.0, 2.5, 5.0 or 10.0 kHz	
	Frequency Range	0-300 Hz in Scalar Mode; 120 Hz in Vector Mode	
	Overload Capacity	CT = Constant Torque, 150% overload / 60 sec. VT = Variable Torque (Quadratic Load), 110% overload / 60 sec.	
Control Inputs	6 programmable isolated digital inputs, 24Vdc logic		
	2 isolated programmable differential analog inputs 11 bit; programmable for current or voltage (0-10V, 4-20mA or 0-20mA)		
Control Outputs	3 programmable relay output; NO/NC (Form C); 240Vac, 30Vdc / 1.0 A		
	2 isolated programmable analog outputs 11 bit; programmable for current or voltage (0-10V, 4-20mA or 0-20mA)		
Communication	Serial	Optional RS-232 serial interface, RS-485 with external RS-232/485 converter	
	Field Bus	Isolated RS-485 / Modbus RTU (standard)	
		CAN interface module (CANopen/DeviceNet)	
		Profibus DP interface module	
Safety	Protections	Motor over current	DC link over voltage
		Motor overload	DC link under voltage
		Output phase-to-phase short circuit	Drive over temperature
		Output phase-to-ground short circuit	External fault
		Programming error	
Ambient	Temperature	14 - 122°F (50°C), up to 140°F (60°C) with 2% / 1.8°F (1°C) output current derating	
	Humidity	5-90% Non Condensing	
	Altitude	0-3300 ft (1000m), up to 13,200 ft (4000m) with 1% output current derating per 330ft (100m) above 3300 ft (1000m).	
Regulatory Conformance	IEC 60146	Semiconductor convertors	
	UL 508 C	Power Conversion Equipment	
	UL 840	Insulation coordination including clearances and creepage distances for electrical equipment.	
	EN 50178	Electronic equipment for use in power installations	
	EN 61800-2	General requirements adjustable speed electrical power drive systems	
	EN 61800-3	EMC product standard including specific test methods adjustable speed electrical power drive systems	
	EN 61800-5-1	Safety requirements adjustable speed electrical power drive systems	
	EN 60204-1	Safety of machinery. Electrical equipment of machines. Part 1: General requirements.	
	RoHS and WEEE Guidelines		
Approvals	UL, cUL, CE, C-Tick, GOST		
Special Functions	Linear and "S" ramp accel and decel, local/remote control, FWD/REV selection, DC braking, manual and auto torque boost, motor slip comp., electronic pot, two skip frequencies, max. and min. adjustable frequency limits, adjustable output current PID Controller		
Keypad	4 digit display, 2 indicator LEDs and 8 keys		
	Readouts for: output frequency (Hz), output current (A), output voltage (V), motor torque (%) in vector mode, DC bus voltage (V), value proportional to frequency (Ex.: RPM), heatsink temperature, fault and status messages		

Data is subject to change without notice.

NON-STOCK (call for lead time)

100% Braking Torque at 20% Duty Cycle (12 Seconds Max. Braking Time)
NEMA 1 Enclosure

Motor Voltage	Motor HP [1]	CFW11 Catalog Number	Braking Resistor Catalog Number [2]	Rated Ohms	Rated Watts	Dimensions (in.) HxWxD [3]	List Price	Multiplier
230 Vac	1 1/2	CFW110006B20N1Z	CFDB2-125-224	125	224	5 x 12 x 5	$520	V1
	2	CFW110007B20N1Z	CFDB2-95-298	95	298	5 x 12 x 7	$749	V1
	2	CFW110007T20N1Z	CFDB2-95-298	95	298	5 x 12 x 7	$749	V1
	3	CFW110010S20N1Z	CFDB2-63-448	63	448	5 x 12 x 7	$749	V1
	3	CFW110010T20N1Z	CFDB2-63-448	63	448	5 x 12 x 7	$749	V1
	5	CFW110013T20N1Z	CFDB2-38-746	38	746	5 x 12 x 10	$941	V1
	5	CFW110016T20N1Z	CFDB2-38-746	38	746	5 x 12 x 10	$941	V1
	7 1/2	CFW110024T20N1Z	CFDB5-26-1119	26	1,119	5 x 12 x 13	$1,130	V1
	10	CFW110028T20N1Z	CFDB2-19-1492	19	1,492	5 x 12 x 16	$1,322	V1
	10	CFW110033T20N1Z	CFDB2-19-1492	19	1,492	5 x 12 x 16	$1,322	V1
	15	CFW110045T20N1Z	CFDB2-13-2238	12.6	2,238	5 x 19 x 10	$1,644	V1
	20	CFW110054T20N1Z	CFDB2-10-2984	9.6	2,984	5 x 19 x 10	$1,644	V1
	25	CFW110070T20N1Z	CFDB2-8-3730	7.5	3,730	5 x 19 x 13	$1,997	V1
	30	CFW110086T20N1Z	CFDB2-7-4476	6.3	4,476	5 x 26.5 x 13	$2,588	V1
	40	CFW110105T20N1Z	CFDB2-5-5968	4.9	5,968	5 x 26.5 x 16	$3,269	V1
	50	CFW110142T20N1DBZ	CFDB2-4-7460	3.9	7,460	10 x 28 x 10	$3,820	V1
	60	CFW110180T20N1DBZ	CFDB2-4-8952	3.3	8,952	10 x 28 x 10	$3,820	V1
	75	CFW110211T20N1DBZ	CFDB2-3-11190	2.7	11,190	10 x 28 x 13	$5,622	V1
460 Vac	2	CFW110003T40N1Z	CFDB2-375-298	375	298	5 x 12 x 7	$749	V1
	3	CFW110005T40N1Z	CFDB2-250-448	250	448	5 x 12 x 7	$749	V1
	5	CFW110007T40N1Z	CFDB2-150-746	150	746	5 x 12 x 10	$941	V1
	7 1/2	CFW110010T40N1Z	CFDB2-100-1119	100	1,119	5 x 12 x 13	$1,130	V1
	10	CFW110013T40N1Z	CFDB2-75-1492	75	1,492	5 x 12 x 16	$1,322	V1
	10	CFW110017T40N1Z	CFDB2-75-1492	75	1,492	5 x 12 x 16	$1,322	V1
	15	CFW110024T40N1Z	CFDB2-50-2238	50	2,238	5 x 19 x 13	$1,820	V1
	20	CFW110031T40N1Z	CFDB2-38-2984	38	2,984	5 x 19 x 16	$2,201	V1
	25	CFW110038T40N1Z	CFDB2-30-3730	30	3,730	5 x 26.5 x 13	$2,511	V1
	30	CFW110045T40N1Z	CFDB2-25-4476	25	4,476	5 x 26.5 x 13	$2,511	V1
	40	CFW110058T40N1Z	CFDB2-19-5968	19	5,968	5 x 26.5 x 16	$2,938	V1
	50/60	CFW110070T40N1Z	CFDB2-15-8952	15	8,952	10 x 28 x 13	$4,328	V1
	75	CFW110088T40N1Z	CFDB2-10-11190	10	11,190	10 x 28 x 16	$5,659	V1
	75	CFW110105T40N1DBZ	CFDB2-10-11190	10	11,190	10 x 28 x 16	$5,659	V1
	100/125	CFW110142T40N1DBZ	CFDB2-8-18650	8	18,650	24 x 30 x 18	$9,560	V1
	150	CFW110180T40N1DBZ	CFDB2-5-22380	5	22,380	24 x 30 x 18	$11,854	V1
	175	CFW110211T40N1Z	CFDB2-5-29840	5	29,840	24 x 30 x 18	$11,854	V1
	200	CFW110242T40N1Z	CFDB2-4-29840	3.8	29,840	30 x 18 x 32	$11,854	V1
	250	CFW110312T40N1Z	CFDB2-3-37300	3	37,300	30 x 18 x 32	$12,533	V1
	300	CFW110370T40N1Z	CFDB2-3-44760	2.5	44,760	30 x 18 x 32	$15,393	V1
	350	CFW110477T40N1Z	CFDB2-3-52220	2.2	52,220	30 x 18 x 48	$21,406	V1
	400	CFW110515T40N1Z	CFDB2-2-59680	1.9	59,680	30 x 18 x 48	$22,167	V1
	500	CFW110601T40N1Z	CFDB2-2-74600	1.5	74,600	30 x 18 x 64	$32,077	V1
	600	CFW110720T40N1Z	Consult with WEG					V1

Notes:
1) Dimensions are provided for estimating purposes only.

Variable Frequency Drives

Dynamic Braking Resistors for CFW11

NON-STOCK (call for lead time)

100% Braking Torque at 50% Duty Cycle (30 Seconds Max. Braking Time) NEMA 1 Enclosure

Motor Voltage	Motor HP	CFW11 Catalog Number	Braking Resistor Catalog Number	Rated Ohms	Rated Watts	Dimensions (in.) HxWxD [1]	List Price	Multiplier
230 Vac	1 1/2	CFW110006B2ON1Z	CFDB5-125-560	125	560	5 x 12 x 10	$941	V1
	2	CFW110007B2ON1Z	CFDB5-95-746	95	746	5 x 12 x 10	$941	V1
	2	CFW110007T2ON1Z	CFDB5-95-746	95	746	5 x 12 x 10	$941	V1
	3	CFW110010S2ON1Z	CFDB5-63-1119	63	1,119	5 x 12 x 10	$1,130	V1
	3	CFW110010T2ON1Z	CFDB5-63-1119	63	1,119	5 x 12 x 10	$1,130	V1
	5	CFW110013T2ON1Z	CFDB5-38-1865	38	1,865	5 x 19 x 13	$1,820	V1
	5	CFW110016T2ON1Z	CFDB5-38-1865	38	1,865	5 x 19 x 13	$1,820	V1
	7 1/2	CFW110024T2ON1Z	CFDB5-26-2798	26	2,798	5 x 26.5 x 13	$2,511	V1
	10	CFW110028T2ON1Z	CFDB5-19-3730	19	3,730	5 x 26.5 x 13	$2,511	V1
	10	CFW110033T2ON1Z	CFDB5-19-3730	19	3,730	5 x 26.5 x 13	$2,511	V1
	15	CFW110045T2ON1Z	CFDB5-13-5595	12.6	5,595	5 x 26.5 x 16	$2,938	V1
	20	CFW110054T2ON1Z	CFDB5-10-7460	9.6	7,460	10 x 28 x 13	$4,663	V1
	25	CFW110070T2ON1Z	CFDB5-8-9325	7.5	9,325	10 x 28 x 13	$4,663	V1
	30	CFW110086T2ON1Z	CFDB5-7-11190	6.3	11,190	10 x 28 x 16	$5,254	V1
	40	CFW110105T2ON1Z	CFDB5-5-14920	4.9	14,920	24 x 30 x 18	$6,762	V1
	50	CFW110142T2ON1DBZ	CFDB5-4-18650	3.9	18,650	24 x 30 x 18	$10,325	V1
	60	CFW110180T2ON1DBZ	CFDB5-4-22380	3.3	22,380	24 x 30 x 18	$10,325	V1
	75	CFW110211T2ON1DBZ	CFDB5-3-27975	2.7	27,975	32 x 30 x 18	$10,325	V1
460 Vac	2	CFW110003T4ON1Z	CFDB5-375-746	375	746	5 x 12 x 13	$1,130	V1
	3	CFW110005T4ON1Z	CFDB5-250-1119	250	1,119	5 x 12 x 16	$1,511	V1
	5	CFW110007T4ON1Z	CFDB5-150-1865	150	1,865	5 x 19 x 13	$1,703	V1
	7 1/2	CFW110010T4ON1Z	CFDB5-100-2798	100	2,798	5 x 19 x 16	$1,892	V1
	10	CFW110013T4ON1Z	CFDB5-75-3730	75	3,730	5 x 26.5 x 16	$2,938	V1
	10	CFW110017T4ON1Z	CFDB5-75-3730	75	3,730	5 x 26.5 x 16	$2,938	V1
	15	CFW110024T4ON1Z	CFDB5-50-5595	50	5,595	10 x 28 x 13	$4,254	V1
	20	CFW110031T4ON1Z	CFDB5-38-7460	38	7,460	10 x 28 x 13	$4,254	V1
	25	CFW110038T4ON1Z	CFDB5-30-9325	30	9,325	10 x 28 x 16	$4,715	V1
	30	CFW110045T4ON1Z	CFDB5-25-11190	25	11,190	10 x 28 x 16	$5,071	V1
	40	CFW110058T4ON1Z	CFDB5-19-14920	19	14,920	24 x 30 x 18	$8,858	V1
	50/60	CFW110070T4ON1Z	CFDB5-15-22380	15	22,380	24 x 30 x 18	$10,176	V1
	75	CFW110088T4ON1Z	CFDB5-10-27975	10	27,975	32 x 30 x 18	$14,625	V1
	75	CFW110105T4ON1DBZ	CFDB5-10-27975	10	27,975	32 x 30 x 18	$14,625	V1
	100/125	CFW110142T4ON1DBZ	CFDB5-8-46625	8	46,625	32 x 30 x 18	$16,923	V1
	150	CFW110180T4ON1DBZ	CFDB5-5-55950	5	55,950	48 x 30 x 18	$18,814	V1
	175	CFW110211T4ON1DBZ	CFDB5-5-74600	5	74,600	72 x 30 x 18	$31,678	V1
	200	CFW110242T4ON1Z	CFDB5-4-74600	3.8	74,600	30 x 18 x 72	$31,678	V1
	250	CFW110312T4ON1Z	CFDB5-3-93250	3	93,250	30 x 18 x 72	$31,678	V1
	300	CFW110370T4ON1Z	CFDB5-3-111900	2.5	111,900	(2) 30 x 18 x 56	$54,028	V1
	350	CFW110477T4ON1Z	CFDB5-3-130550	2.2	130,550	(2) 30 x 18 x 56	$54,028	V1
	400	CFW110515T4ON1Z	CFDB5-2-149200	1.9	149,200	(2) 30 x 18 x 56	$73,288	V1
	500	CFW110601T4ON1Z	CFDB5-2-186500	1.5	186,500	(2) 30 x 18 x 56	$73,288	V1
	600	CFW110720T4ON1Z	Consult with WEG					V1

Notes:
1) Dimensions are provided for estimating purposes only.

Data is subject to change without notice.

3% Z (Impedance) – NEMA 1 Enclosure

NON-STOCK (call for lead time)

Motor Voltage	Motor HP	Reactor Amps	Catalog Number	Dimensions (in.) [1] HxWxD	Approx. Weight (lbs.) [1]	List Price	Multiplier
230 Vac	Input Power Supply: Three-Phase 230 Vac						
	3	12	LRW012D3N1	8 x 8 x 6	16	$436	V1
	5	18	LRW018D3N1	8 x 8 x 6	16	$512	V1
	7 1/2	25	LRW025D3N1	13 x 13.3 x 13.1	42	$590	V1
	10	35	LRW035D3N1	13 x 13.3 x 13.1	45	$634	V1
	15	45	LRW045D3N1	13 x 13.3 x 13.1	54	$756	V1
	20	55	LRW055D3N1	13 x 13.3 x 13.1	55	$890	V1
	25 / 30	80	LRW080D3N1	13 x 13.3 x 13.1	74	$905	V1
	40	100	LRW100D3N1	13 x 13.3 x 13.1	78	$1,086	V1
	50	130	LRW130D3N1	13 x 13.3 x 13.1	60	$1,175	V1
	60	160	LRW160D3N1	13 x 13.3 x 13.1	71	$1,424	V1
	75	200	LRW200D3N1	13 x 13.3 x 13.1	79	$1,488	V1
460 Vac	Input Power Supply: Three-Phase 460 Vac						
	1 1/2	2	LRW002G3N1	8 x 8 x 6	11	$387	V1
	2 , 3	4	LRW004G3N1	8 x 8 x 6	11	$394	V1
	5	8	LRW008G3N1	8 x 8 x 6	14	$415	V1
	7 1/2	12	LRW012G3N1	8 x 8 x 6	16	$452	V1
	10	18	LRW018G3N1	8 x 8 x 6	16	$519	V1
	15	25	LRW025G3N1	13 x 13.3 x 13.1	42	$601	V1
	20 / 25	35	LRW035G3N1	13 x 13.3 x 13.1	45	$715	V1
	30	45	LRW045G3N1	13 x 13.3 x 13.1	54	$841	V1
	40	55	LRW055G3N1	13 x 13.3 x 13.1	55	$987	V1
	50 / 60	80	LRW080G3N1	13 x 13.3 x 13.1	60	$1,179	V1
	75	100	LRW100G3N1	13 x 13.3 x 13.1	71	$1,450	V1
	100	130	LRW130G3N1	13 x 13.3 x 13.1	74	$1,750	V1
	125	160	LRW160G3N1	13 x 13.3 x 13.1	48	$2,060	V1
	150	200	LRW200G3N1	13 x 13.3 x 13.1	79	$2,400	V1
	200	250	LRW250G3N1	24 x 18.4 x 16.8	99	$2,990	V1
	250	320	LRW320G3N1	24 x 18.4 x 16.8	155	$3,700	V1
	300	400	LRW400G3N1	24 x 18.4 x 16.8	155	$4,962	V1
	350 / 400	500	LRW500G3N1	47 x 26.5 x 24.9	165	$6,446	V1
	450 / 500	600	LRW600G3N1	47 x 26.5 x 24.9	205	$7,950	V1
	750 / 800	1000	LRW1000G3N1	Consult Factory		$9,788	V1

Notes:
1) Dimensions and weights are provided for estimating purposes only.