Stearns® *Brake Replacement Parts*

P/N 8-078-948-09
effective 6/5/98

Service Instructions for Brake Shaft Kit

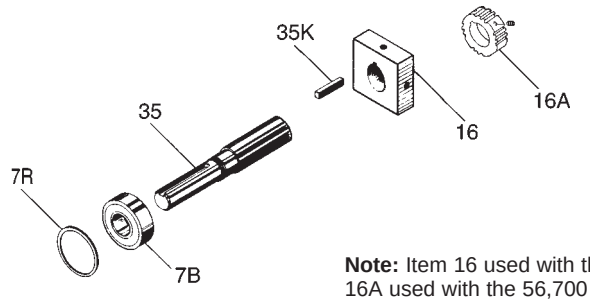

Note: Item 16 used with the 55,700 Series. Item 16A used with the 56,700 Series

Item No.	Description of Part Included in Kit	Quality per Kit	
		5/8" Dia. Shaft	7/8" Dia. Shaft
7B	Ball bearing	1	1
7R	Retaining ring	1	1
35	Shaft coupler, 5/8" dia.	1	
	Shaft coupler, 7/8" dia.		1
16 (A)	Hub 5/8 diameter	1	
	Hub 7/8 diameter		1
35K	Key	1	1

Important

Please read these instructions carefully before servicing your Stearns brake. Failure to comply with these instructions could cause injury to personnel and/or damage to property if the brake is installed or operated incorrectly. For definition of limited warranty/liability, contact Rexnord Industries, Inc., Stearns Division, 5150 S. International Dr., Cudahy, Wisconsin 53110, (414) 272-1100.

Caution

1. Servicing shall be in compliance with applicable local safety codes including Occupational Safety and Health Act (OSHA). All wiring and electrical connections must comply with the National Electric Code (NEC) and local electric codes in effect.
2. To prevent an electrical hazard, disconnect power source before working on the brake. If power disconnect point is out of sight, lock disconnect in the *off* position and tag to prevent accidental application of power.
3. Be careful when touching the exterior of an operating brake. Allow sufficient time for the brake to cool before disassembly. Surface may be hot enough to be painful or cause injury.
4. Do not operate brake with housing removed. All moving parts should be guarded.
5. After usage, the brake interior will contain burnt and degraded friction material dust. This dust must be removed before servicing or adjusting the brake.

   DO NOT BLOW OFF DUST using an air hose. It is important to avoid dispersing dust into the air or inhaling it, as this may be dangerous to your health.

   a) Wear a filtered mask or a respirator while removing dust from the inside of a brake.

   b) Use a vacuum cleaner or a soft brush to remove dust from the brake. When brushing, avoid causing the dust to become airborne. Collect the dust in a container, such as a bag, which can be sealed off.
6. Maintenance shall be performed only by qualified personnel familiar with the construction and operation of the brake.
7. For proper performance and operation, only genuine Stearns parts should be used for repairs and replacements.

Warning! Any mechanism or load held in position by the brake should be secured to prevent possible injury to personnel or damage to equipment before any disassembly of the brake is attempted or before the manual release knob or lever is operated on the brake.

Instructions

Note 1: Brake shafts must be replaced with identical diameter shafts that were provided originally.

Note 2:. This (new design) shaft and hub is interchangeable with (the) shaft having double external keyways and (the) hub with an extended bore.

1. To remove housing (7), unscrew four 3/8-19 nuts (supplied by customer) which secure the brake and motor combination and to the mounting flange of the reducer. Grasp brake and motor combination and pull free from reducer. *Save* brake output shaft key for reuse or replace if worn. Pull housing and shaft assembly (7) free from mounting studs (128). These mounting studs are threaded into motor C-face and should be left installed.

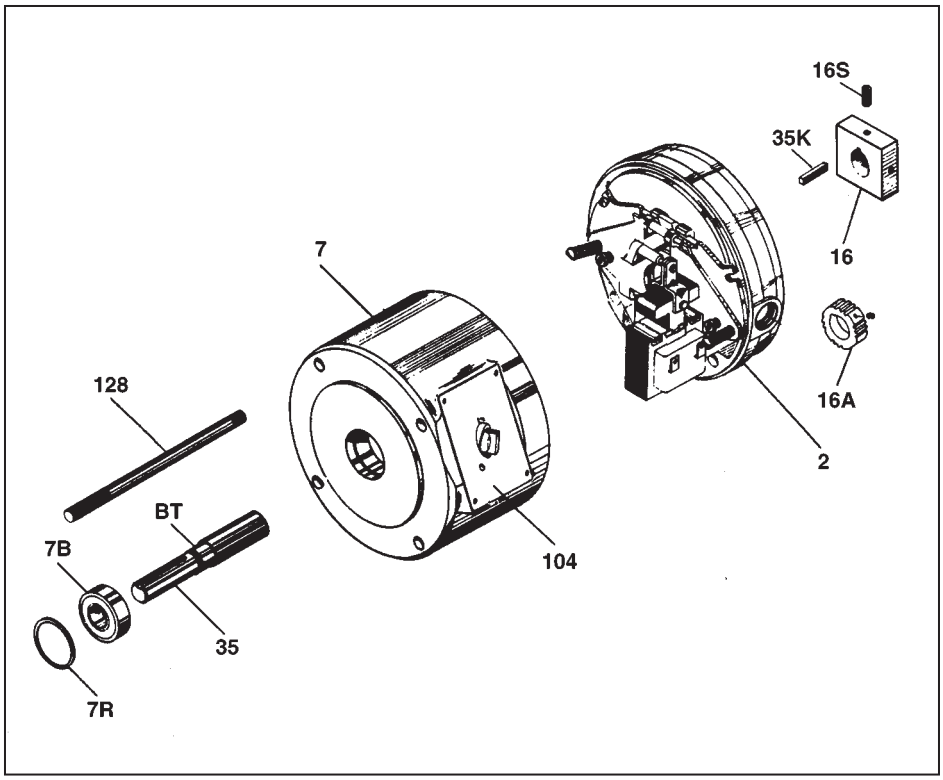

2. Using suitable bushing or tubing against inner race, press ball bearing (7B) over bearing turn (BT) of new shaft (35) until seated against shaft flange.

3. Remove old retaining ring (7R) from groove inside housing. Old shaft (35) and bearing (7B) can now be removed together by pushing on the shaft end inside of housing (7). Discard the old shaft and bearing.

4. Clean bearing pocket in housing to remove any foreign material – chips, dirt, etc. Slide new shaft and bearing combination (35 and 7B) into housing, (7) with solid shaft end extending outboard from housing mounting face. Seat bearing against shoulder and secure by installing retaining ring (7R).

5. Slide brake assembly (2) from studs (128) and remove hub (16 or 16A) and key (16S). Observe position of solenoid so that assembly is installed in same position.

6. With key (35K) in place on motor shaft, position new hub (16) on th shaft to within 1/4" of motor mounting face. Key must be flush with the end of the shaft. Securely torque both set screws (16S). Tighten to 78 in-lbs on 1/4" diameter set screws and to 156 in-lbs on 5/16" diameter set screws. Place brake assembly (2) onto studs, rotate hub so that friction disc(s) slide over it freely, file I.D. of friction disc(s) if necessary. Seat assembly against motor face.

   Note: A dimple drilled into shaft for set screw at 90° from keyway is recommended on some applications, especially vertical mounting.

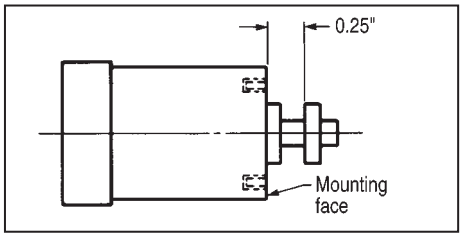

Figure 1

7. Remove one access cover (104) and slide housing and shaft assembly onto mounting studs (128). Observe an rotate coupler shaft (35) t engage motor key into the shaft coupler's internal keyway.

8. Remount and secure brake and motor combination to reducer. Be sure to use key, (saved for reuse or new key in Step 1) when inserting brake shaft into reducer.

9. Restore electric power to brake and motor. Determine that operation is satisfactory and replace access cover (104).

10. **Caution!** Do not run motor with brake in manual release position. It is intended only for emergency manual movement of the driven load, not as a substitute for full electrical release.

NOTE: For complete instructions, *with troubleshooting*, request sheet applicable to the series of brake that you have.

Copyright© 1998 by Rexnord Industries, Inc.

Rexnord Industries, Inc., Stearns Division, 5150 S. International Dr., Cudahy, Wisconsin 53110, (414) 272-1100 Fax (414) 277-4364